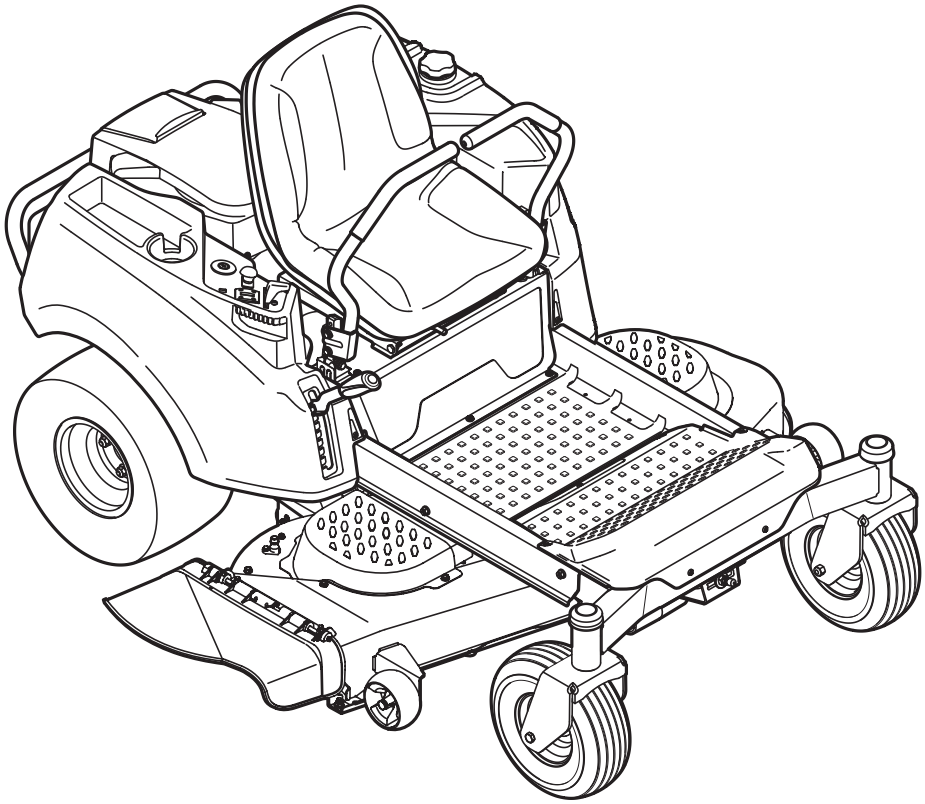

H15
FORM NO. 769-09125C

MTD Products Aktiengesellschaft • Saarbrücken • Germany

1

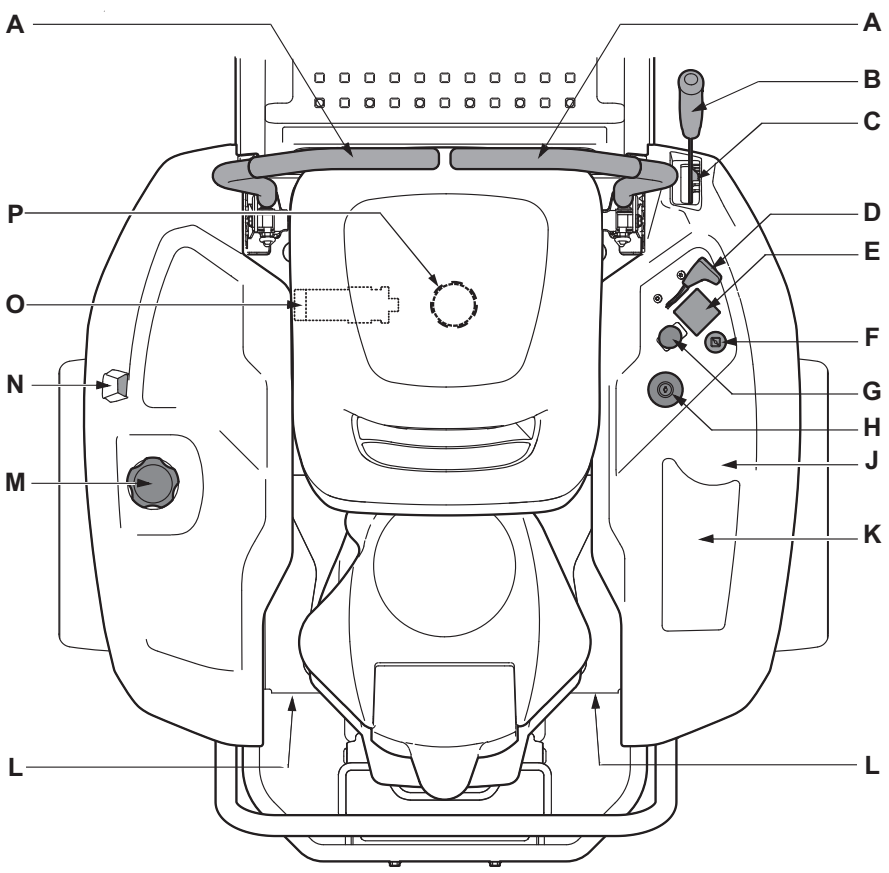

2

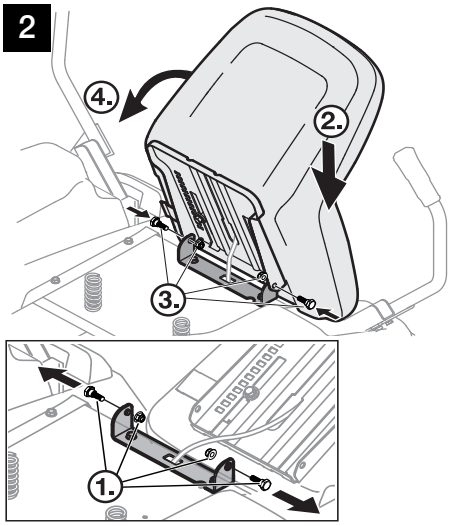

3

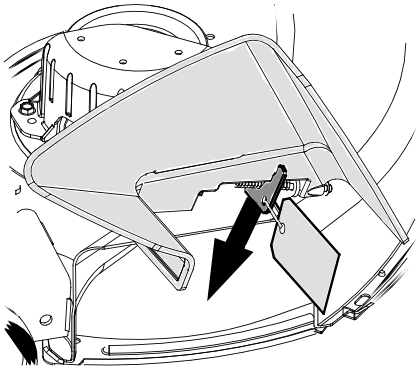

4

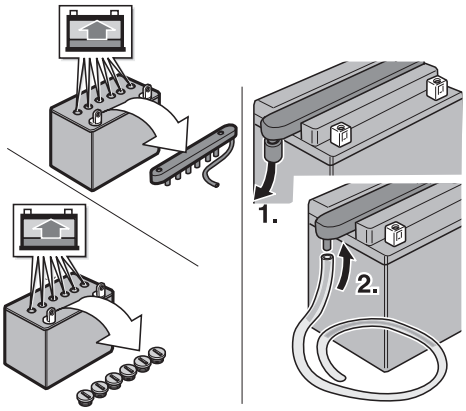

5

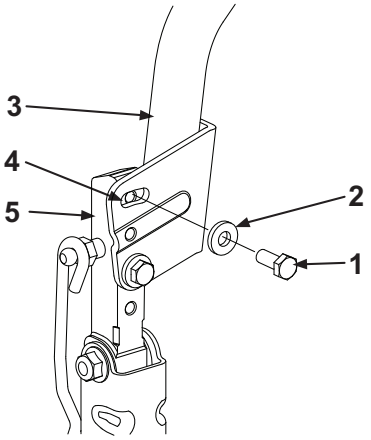

6

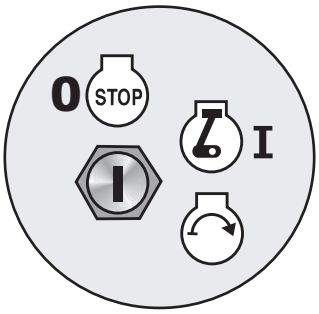

7

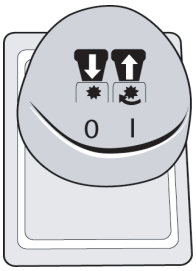

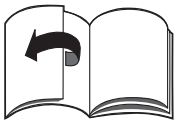

8

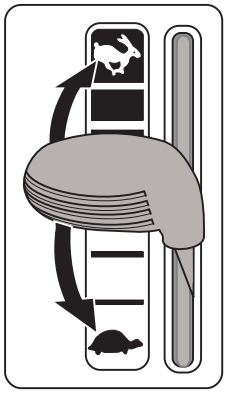

9a

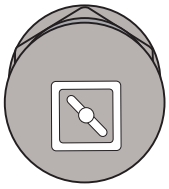

9b

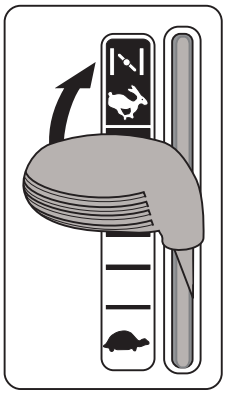

10

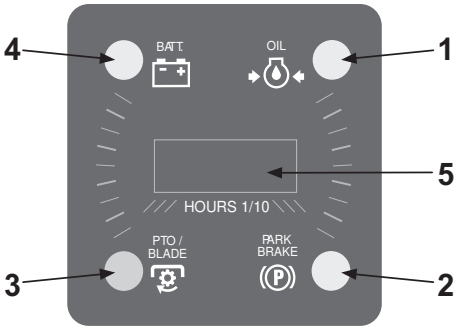

11

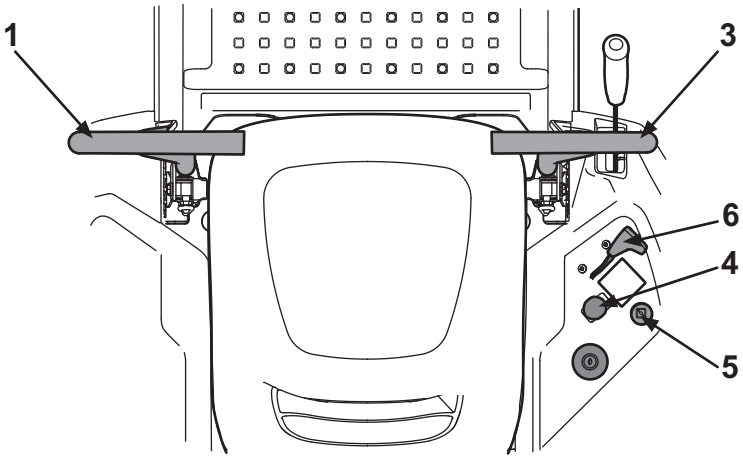

12

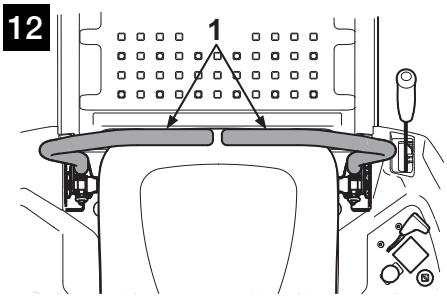

13

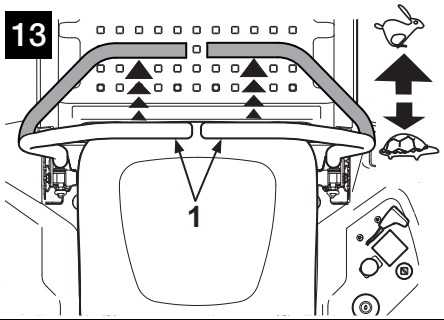

14

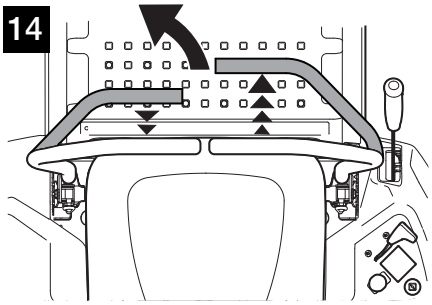

15

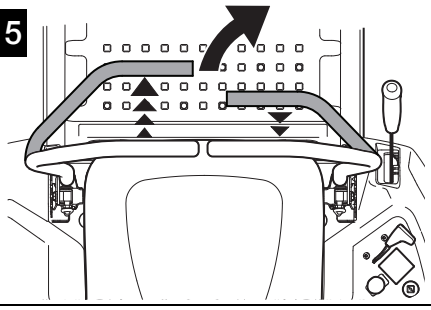

16

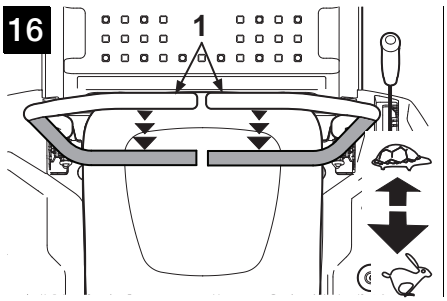

17

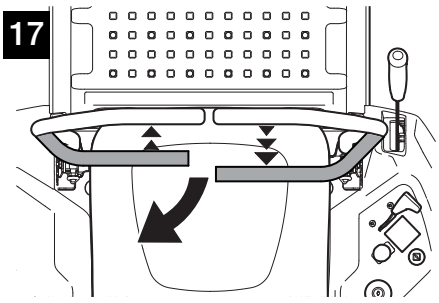

18

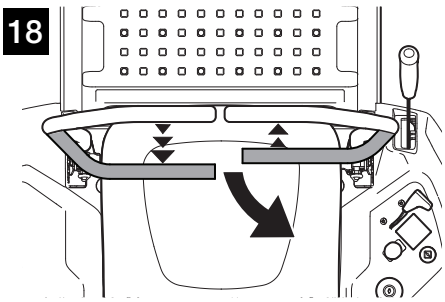

19

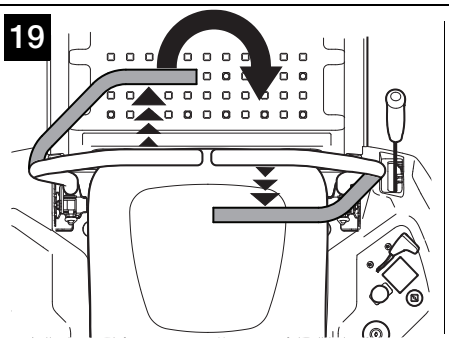

20

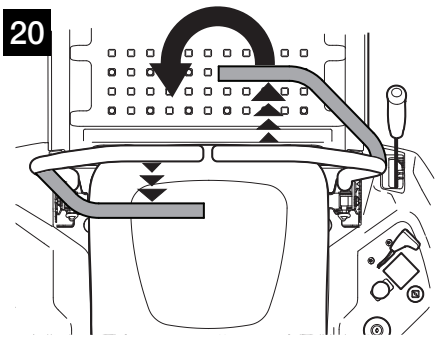

21

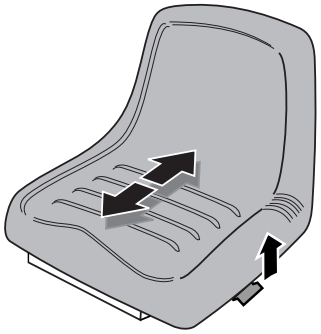

22

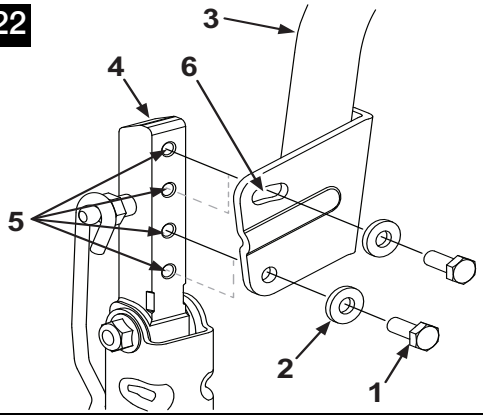

23

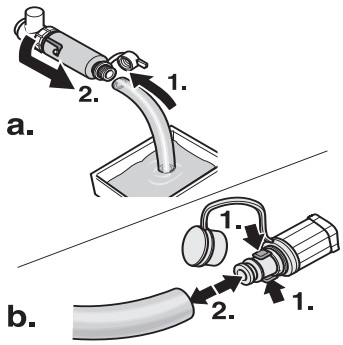

24

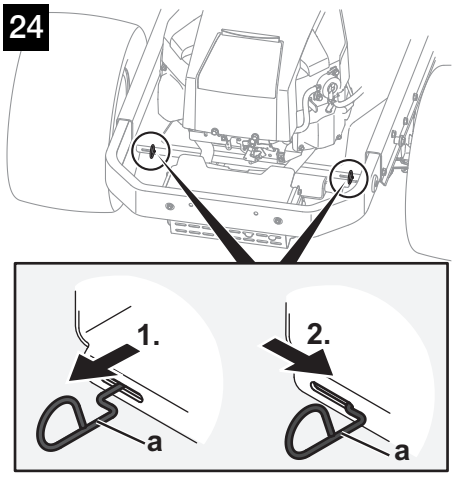

25

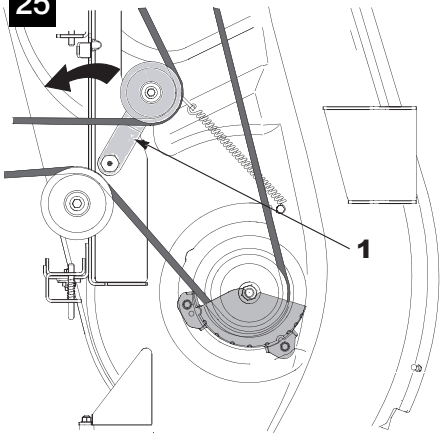

26

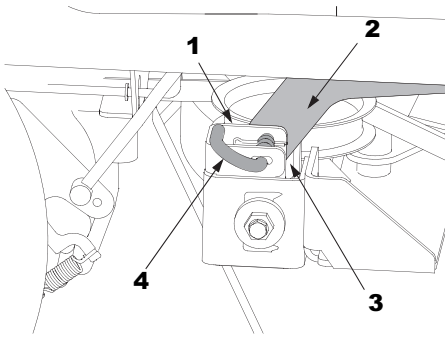

27

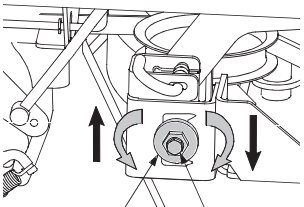

28a

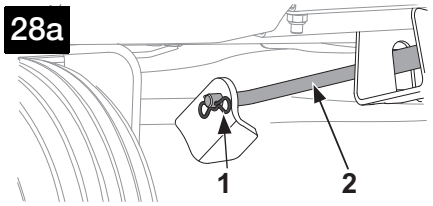

28b

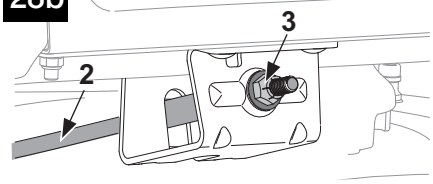

29

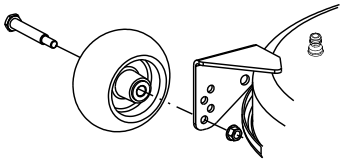

30

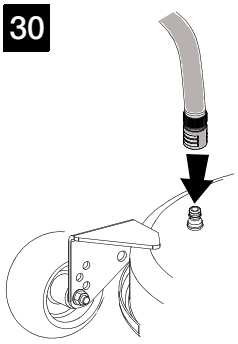

31

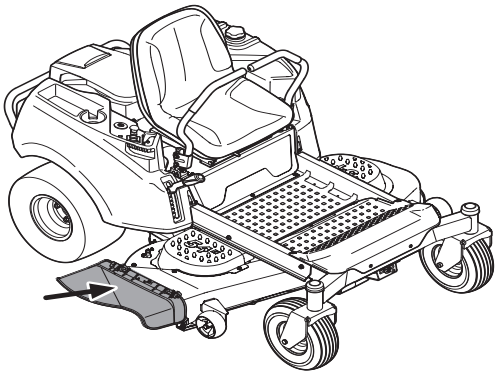

32

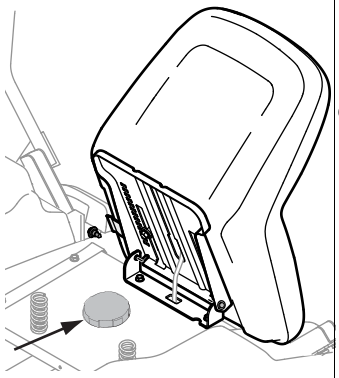

33

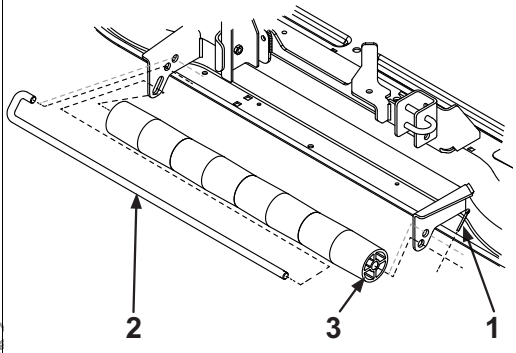

English
(Original operating instructions) 4

Français
(Notice d’instructions d’origine) 13

Deutsch
(Originalbetriebsanleitung) 23

Nederlands
(Originele gebruiksaanwijzing) 32

Italiano
(Istruzioni per l’uso originali) 41

Español
(Instrucciones de funcionamiento originales) 50

Svenska
(Originalbruksanvisning) 60

Dansk
(Originale driftsvejledning) 68

Norsk
(Originale driftsanvisningen) 77

Suomi
(Alkuperäinen käyttöohjekirja) 86

Polski
(Oryginalna instrukcja obsługi) 95

Eesti
(Originaalkasutusjuhend) 105

Table of Contents

For your safety 4
Assembling the appliance 5
Controls and indicators 6
Operating safety 7
Transporting the appliance 9
Cleaning/Servicing 10
Removing/Installing and adjusting cutter deck 11
Shutting down the machine 11
Guarantee 11
Information about the engine 11
Troubleshooting 12

Information on rating plate

This information is very important for subsequent identification, ordering spare parts for the appliance and for the customer service desk.

You will find the identification plate under the driver's seat.

Enter all the details on your appliance's rating plate in the following fields.

_____

_____

_____

You will find this and further information about the appliance in the separate CE-declaration of conformity which is a component part of the se operating instructions.

For your safety

Using the appliance correctly

This unit is designed to be used
- as a rider for mowing the lawns of domestic and leisure gardens,
- according to the descriptions and safety instructions provided in these operating instructions.

Any other use is not as intended. Improper use is not covered by the warranty and the manufacturer will reject any liability. The user is liable for all damage to third parties and their property.

The manufacturer accepts no responsibility for damages resulting from unauthorised alterations to the unit that have been carried out by the owner or operator.

This mower is not licensed for use on public roads or for transporting people.

General safety notes

Carefully read these operating instructions through before first using the appliance and proceed accordingly.

Tell other users about the correct use of the vehicle.

Only operate the appliance in the technical condition stipulated and supplied by the manufacturer.

Carefully keep these operating instructions in a safe place and have them to hand.

With a change of ownership, pass the operating instructions on with the appliance.

Spare parts and accessories must satisfy the requirements specified by the manufacturer. Therefore use original spare parts and original accessories only or spare parts and accessories authorised by the manufacturer.

Only allow repair work to be carried out from a specialist garage.

Before working with the appliance

Persons allowed to use the appliance must not be under the influence of intoxicating substances (e.g. alcohol, drugs or medicine).

This appliance is not intended for use by persons (including children) with reduced physical, sensory or mental capabilities, or lack of experience and knowledge, unless they have been given supervision or instruction concerning use of the appliance by a person responsible for their safety.

Children should be supervised to ensure that they do not play with the appliance.

Persons under 16 years of age may not operate the appliance.

Before commencing work with the appliance, familiarise yourself with all of the equipment and control elements as well as with their function.

Store fuel in approved receptacles only, and never near sources of heat, e.g. ovens, hot water tanks, etc.

Replace the exhaust, fuel tank or fuel cap immediately if they become damaged.

Attach trailers and accessory equipment in accordance with the guidelines.

Driving performance, especially steering, braking capability, and overall stability are affected by attachments, towed items, ballast weights and the weight of a grass catcher when full.

While working with the unit

When working with or on the unit, wear appropriate work clothes (e.g. safety boots, long trousers, tight-fitting clothing, goggles and hearing protection).

Only operate the appliance in a technically flawless state.

Never change the engine settings preset at the factory.

Never refuel the unit while the engine is running or hot. Only fill the tank in the open air.

Open fire or sparks must be avoided and you should not smoke while refuelling the unit.

Ensure that no persons, especially children, or animals are in the area of operation.

Check the area in which you intend to use the unit and remove all objects that could be hit and propelled by the unit.
You can thus avoid injuries and damage to the unit.

Never mow on slopes that are steeper than 20%. Working on slopes is dangerous; the risk of rollover and sliding is increased. When working on slopes, always drive off and halt the unit gently and gradually. Never ride straight up or down an incline, but always across it.

Only use the unit in daylight or with a sufficient level of artificial lighting.

The unit is not authorised for the transport of people. Never allow passengers on the unit.

Before any work on the appliance

Protect yourself from injury.
Before doing any work to this appliance:
- turn the engine off,
- remove the ignition key,
- lock the parking brake.
- wait until all moving parts have come to rest and the engine has fully cooled.
- pull off the cap of the spark plug so that the engine cannot inadvertently start.

After working with the appliance

Only leave the appliance once you have turned off the engine, actuated the parking brake and have removed the ignition key.

Safety features

Safety features serve to protect you and must always be functional.

You may not make any alterations to the safety features or circumvent their proper functioning.

Safety features are:

Grass flap

Fig. 31

The grass flap protects you against possible injuries resulting from the cutting blade or objects that are propelled by it.
The unit may only be operated with the grass flap attached.

Safety lock system

The safety interlock system will not allow the engine to start unless
- the driver is sitting on the seat,
- the PTO switch is at the OFF position,
- both drive control levers are in the outer neutral recesses.
  Note: In this position the parking brake is activated at the same time (park position).

The safety lock system switches OFF the engine when the operator leaves the driver's seat without engaging the parking brake and/or the PTO switch is at the OFF position.

Note: To restart the engine you must first set the PTO switch to the OFF position.

The safety lock system prevents driving in reverse when the cutters are activated (PTO). The cutters are deactivated automatically.

Note: To switch on the cutter deck again, both drive control levers must be in the neutral or forward driving position.

Then the PTO switch must be moved first to the OFF position and then to the ON position.

Symbols on the appliance

Various symbols are stuck to the appliance in the form of adhesive labels.

The following provides an explanation of the symbols.

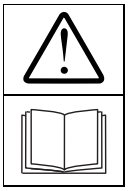

Warning!
Please read the operating instructions before putting lawnmower into operation!

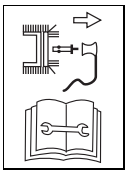

Always remove the spark plug connector before working on the cutters! Keep fingers and feet well away from the cutters! Always switch off the appliance and remove the spark plug connector before adjusting, cleaning or checking it.

Keep third parties away from the danger area!

Risk of injury from rotating blades and other rotating parts.

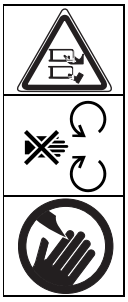

Risk of injury from rotating blades and other rotating parts.
Keep hands and feet out of the openings when the machine is running.

Never ride straight up or down an incline, but always across it.

Working on steep slopes increases danger.

Do not operate the unit with the optional grass catcher without attaching the front counterweight. Do not drive across slopes if the gradient exceeds 15%.

Warning! Risk of explosion.

Battery acid/risk of chemical burns.

When getting on and off, never step on the cutter deck.

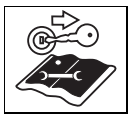

Withdraw the key from the ignition before all work on the unit and observe the instructions in this document.

The unit may be operated with the attached discharge flap or the mulch locking part only.

Keep these symbols visible on the appliance.

Symbols used in these instructions

The following symbols are used in these instructions:

⚠ ***Danger***

Your attention is drawn to dangers in connection with the action described and through which there is a danger to persons.

⚠ ***Warning***

Your attention is drawn to dangers in connection with the action described which could involve material damage.

ⓘ **Note**

Points out important information and tips concerning application.

Details concerning position

Where a position on, or in relation to, the unit is described (e.g. left, right), this is always from the perspective of the driver, sitting on the driver seat and facing forward.

ⓘ **Note**

Graphical representations can vary in detail from the appliance which has been bought.

Assembling the appliance

Installing the seat

Fig. 2

Removing the transport securing device at the ejector flap

Fig. 3

Depending on the model remove the locking plate or cable tie. The deflector closes automatically.

Installing the drive control levers

Fig. 5

- Remove screw (1), washer (2) from the adjusting plate (4) of both control levers (3).
- Place control lever upright and attach to the holder (5) using screw (1) and washer (2).
- Tighten all screws.

ⓘ **Note**

Both control levers should be installed at the same position.

Commissioning the battery

⚠ ***Danger***

Risk of poisoning and injury from battery acid

Wear protective goggles and gloves. Prevent battery acid from coming into contact with skin.

Should battery acid splash into your face or eyes, wash immediately with cold water and consult a doctor.

Should you inadvertently swallow battery acid, drink plenty of water and consult a doctor immediately.

Keep batteries out of the reach of children. Never tilt the battery; the battery acid may run out.

Bring the remaining, unused battery acid to your dealer or to a waste disposal company.

⚠ ***Warning***

Risk of fire, explosion and corrosion due to battery acid and battery acid gases

Immediately clean parts of the appliance upon which battery acid has been sprayed. Battery has a corrosive effect.

Do not smoke and keep burning and hot objects away. Store batteries in rooms which are well ventilated and dry.

There is a risk of a possible short circuit when working with the battery.
Do not place any tools or metal objects on the battery.

If a “maintenance-free/sealed” battery (type 1) is supplied

(Battery without filler plugs)

The battery is filled with battery acid and is sealed at the factory.
However, even a “maintenance-free” battery requires maintenance if it is to have a longer service life.

- Keep the battery clean.
- Avoid tipping the battery.
  Electrolyte fluid leaks from a “sealed” battery, if it is tipped.

If an empty battery (type 2) is supplied

(Battery with filler plugs)

Fig. 4

- Remove the filler plugs of the battery cells.
- Fill each cell slowly with battery acid up to 1 cm below the filling opening.
- Let the lead in the battery absorb the battery acid for thirty minutes.
- Check the level of the battery acid, add more if necessary.
- Before using the battery for the first time, charge it using a battery charger (max. charging current 12 Volt/ 6 Ampere) for 2 to 6 hours.
  After charging the battery, first unplug the charger and then disconnect the battery (see also the operating instructions for the battery charger).
- Re-insert the filler plugs of the battery cells.
- Install the battery in the appliance.
- Remove the strip seal from the battery vent. Connect the venting hose so that the free end points downwards in the appliance. The hose must always allow free passage!
- First connect the red cable (+), and then the black cable (–).
- Thereafter, use only distilled water to top up the battery (check every 2 months).
- Keep the battery clean.

⚠ ***Warning***

Observe the order in which the battery is mounted when connecting/disconnecting the terminals.

Fitting:

- First connect the red cable (+/positive pole) and then the black cable (–/negative pole).

Removal:

- First disconnect the black cable (–/negative pole) and then the red cable (+/positive pole).

Controls and indicators

⚠ ***Warning.***
Damage to the appliance.

The control and indicator functions will be described to begin with.
Do not perform any functions at this stage!

Fig. 1

A Right and left drive control lever
B Cutting height setting lever
C Cutting height adjusting segment
D Throttle
E Display cluster (optional)
F Choke (depending on model)
G PTO-switch
H Ignition
J Can holder
K Tray
L Gear release for hydrostatic drive (not shown)
M Fuel cap
N Tank contents display (depending on model)
O Adjusting lever for seat (not shown)
P Hydraulic oil expansion tank (depending on model)

Right and left drive control lever (A)

Fig. 1

The levers are used to change the direction of travel, to regulate the speed, to stop the unit and to lock the parking brake (see detailed description in the “Operation” section).

Note

Before you can start the engine you must first move the two control levers into the outer neutral recesses. In this position the parking brake is also activated at the same time.

Cutting height setting lever (B)

Fig. 1

This lever adjusts the cutter settings.

Cutting height adjusting segment (C)

Fig. 1

Each catch adjusts the height by about 1.25 cm.

lowest point: about 4 cm

highest point: about 10 cm

Throttle (D)

Fig. 8 and Fig. 9b

The engine speed can be adjusted continuously.

Fast engine speed = .

Slow engine speed = .

Display cluster (E)

Fig. 10

According to the model, the combination indicator can consist of the following elements.

Oil pressure (1):

The indicator light is lit while the engine is running, immediately switch off engine and check oil level.
Where necessary, visit a garage.

Brake (2):

Indicator lamp lights up if the parking brake is not locked when the engine starts.

Cutter deck (PTO) (3):

The indicator lamp lights up when the cutters are not switched OFF at engine start (PTO).

Battery charge indicator (4):

If the indicator light lights up when the engine is running, this means that the battery is not sufficiently charged.
Where necessary, visit a garage.

Engine hour indicator/battery voltage (5):

Indicates the operating hours in hours and 1/10 hours on the display.

Note

When the ignition is switched on, the battery voltage indicator is indicated for a short period and then the operating hours are indicated.

The operating hours are always counted except for when the ignition key is in the “Stop” position or when it is removed.

Note

Each time 50 operating hours have elapsed (according to the model), the oil change indicator “CHG/OIL” appears in the display for five minutes. This message appears after the next two hours of operation.
See the engine manual for oil change intervals.

Choke (F)

Fig. 9a and Fig. 9b

To start a cold engine, pull the choke (Fig. 9a), or move the accelerator lever to |\| (Fig. 9b).

PTO-switch (G)

Fig. 7

The PTO switch switches the cutter deck/ accessories on and off via an electro-mechanical clutch.

ON = pull the switch.

OFF = press the switch.

Ignition lock (H)

Fig. 6

Start: Turn the key to the right until the engine is running, then release.

Key is in the /I position.

Stopping: Turn the key to left to /0.

Can holder (J)

Fig. 1

Storage recess (K)

Fig. 1

Gear release for hydrostatic drive (L)

Fig. 24

To push the device when the engine is switched off, pull out both levers (near each back wheel) and then press to the right.

To drive the unit, push the lever to the left and press in.

Fuel cap (M)

Fig. 1

Tank contents display (N) (depending on model)

Fig. 1

The inspection window indicates the level of fuel in the fuel tank.

Adjusting lever for seat (O)

Fig. 21

The driver's seat can be set with the seat adjustment lever.

Hydraulic oil expansion tank (P) (depending on model)

Fig. 1

Is used as an expansion vessel for the hydraulic fluid during operation.

Maintenance and inspection only by a specialist company during annual maintenance.

Operating safety

Follow the notes in the engine manual as well!

⚠ ***Danger***

Risk of injury

No person, especially children, and/or animals should be allowed to stand close to the mower while it is in use.

They could be injured by stones or similar objects that might be thrown out.

Children must not operate the appliance.

Never empty the grass catcher while the engine is still running.

While emptying the grass catcher, you yourself or some other person could be injured if the contents of the catcher are ejected at high speed.

When mowing on steep slopes, there is a risk of the mower tipping over and you could be injured as a result.

Never ride straight up or down an incline, but always across it. The unit may only be driven on slopes up to max. 20%.

Never turn on a slope. If there is no other choice, drive down inclines slowly and carefully.

If the ground is wet the mower could slip due to reduced traction and overturn. Mow only when the grass is dry.

Excessive speed can increase the risk of an accident.

Maintain a safe distance at all times from particularly steep slopes, trees, bushes and hedges.

Pay particular attention when you are travelling in reverse while mowing at the same time.

Check the area in which you intend to use the unit and remove all objects that might be hit and propelled by the unit.

If the cutting tool hits a foreign object (e.g. stone) or if the machine starts vibrating violently: stop the engine immediately. Examine the unit for damages.

Consult a specialist workshop if damage has occurred. Never use the appliance when the cutters are not attached.

The altered weight distribution can cause the appliance to tip over.

Never attempt to stabilise the appliance by extending your leg. If the tyres lose traction on an incline, switch OFF the PTO switch and drive slowly straight down the incline.

In the case of mowers with rotary blades, never stand in front of grass ejection holes.

Never place your hands, feet, or other parts of the body near rotating parts.

Switch OFF the engine, remove the ignition key, and disconnect the spark plug terminal before you clear the ejector of blockages and other hindrances.

Do not use the unit in adverse weather conditions, e.g. if there is a probability of rain or a storm.

Risk of suffocation from carbon monoxide

Only allow the combustion engine to run in the open air.

Risk of explosion and fire

Fuel and petrol vapours are volatile and fuel is highly flammable.

Before starting the engine, fill with fuel. Always keep the fuel tank sealed while the engine is running and while it is still hot.

Only fill with fuel when the engine is turned off and has cooled down. Avoid naked flames, the formation of sparks and do not smoke. Only fill the tank in the open air.

Do not start the engine if fuel has been filled up and has overflowed.

Wipe the affected areas clean and wait until the fuel has vaporised.

To avoid the risk of fire, keep the following parts free from grass of oil leaks: engine, exhaust, battery, fuel tank.

⚠ ***Danger***

Risk of injury as a result of the unit being defective

Only operate the appliance in a flawless state. Carry out a visual check each time before using the appliance. Check in particular the safety features, cutting tools and mountings, operation elements, and threaded joints for damage and secureness.

Replace damaged parts before operating.

i Operating times

Observe the national and local regulations concerning the hours when the appliance can be used (where necessary, enquire at your appropriate local authority).

Before each use

Check:

- all protective features
- the engine-oil level (see the engine handbook)
- the fuel level
- the tyre pressure
- the side covering, accessory equipment, the area around the air filter for irt and grass

Refuelling and checking the oil level

i Note

The engine is already filled with oil at the factory – please check and where necessary, top it up.

- Fill up with lead-free petrol. See engine manual.
- Fill the fuel tank to a maximum of 2 cm below the lower edge of the filler neck.
- Turn the fuel tank stopper tight.
- Check the oil level. The oil level must be between the "Full/Max." and the "Add/Min." markings (see also the engine handbook).

Check the tyre pressure

- Check the tyre pressure (see tyre walls) on all wheels.

Preparing for operation

- Park the appliance on a firm level surface and lock the parking brake.
- Conduct all work with the engine switched off.
- Remove the ignition key.

For all work on moving parts:

- disconnect in addition the spark plug.

Set the driver seat

Fig. 21

- Take your place on the driver seat.
- Adjust the seat to the desired position.

Setting the drive control levers

Fig. 22

The drive control levers can be moved up, down, and to the side when necessary.

Adjusting the height:

- Remove the screws (1) and washers (2).
- Remove the drive control lever (3).
- Attach the drive control lever to the top pair of holes (5) in the holder (4) using the screws (1) and the washers (2).

Adjusting the side position:

- Loosen (but do not remove) the screws (1).
- Move the drive control lever in the adjusting segment (6) forwards or backwards to the required position.
- Retighten the screws (1).

Note

Both levers should be installed at the same position.

Setting the cutter wheels

Fig. 29

The cutter wheels should never be lower than 6–12 mm above the ground at the lowest cutter position.

The cutter wheels are not designed to bear the loads generated by the cutters and may have to be offset accordingly.

Setting the rear rollers (according to the model)

The rear rollers can be attached in two positions.

Fig. 33

"High" position (upper hole):

– Standard position – the grass is not rolled or only minimally.

"Low" position (lower hole):

– Roll position – the grass is also rolled after cutting.

- Remove safety split pin (1) from the right side.
- Pull out axle (2) to the left.
- Insert axle into the required hole (High/Low). When inserting the rollers (3), push back onto the axle.
- Align axle (2) with the groove and push through the right holder.
  Re-insert safety split pin (1).

Note

Always fit rear roller on both sides in the same position (High/Low).

Starting the engine

Fig. 11

- Sit in the driver seat.
- Move the two drive control levers into the outer neutral recesses (1 and 3).

Note

In this position the parking brake is also activated at the same time.

- Switch off the PTO-switch (4).
- Raise the cutters to the top.
- Set the throttle lever (6) to .
- To cold-start the engine, pull the choke (5) or move the accelerator lever to (Fig. 9b).
- Turn the ignition key to until the engine is running (attempt to start the engine for max. 5 seconds, wait 10 seconds before attempting to start the engine again).
  When the engine is running, set the ignition key to /I.
- Slowly push back the choke.
- Return the accelerator lever until the engine runs smoothly.

Stopping the engine

- Move the throttle to the middle position.
- Let the engine run for approx. 20 seconds.
- Set the ignition key to /0.
- Remove the ignition key.
- Engage the locking brake before leaving the appliance.

Driving the appliance

Warning

Avoid abrupt driving styles, excess speed, and flat-out braking. Be especially cautious when reversing.
Never set/adjust the driver's seat while the unit is moving.
Never change direction (from drive to reverse or vice versa or zero or pivot turns) without first stopping the appliance.
This appliance turns around its own axis. The rear wheels serve as turning points. A conventional appliance can turn in circles, but not around its own axis.
The small vehicle length and the ability to turn around its own axis give this appliance excellent manoeuvrability.
This appliance features in lieu of a steering wheel two control levers that serve to steer and power the vehicle.
When the control levers are moved to their maximum positions the wheels rotate at the speed set at the accelerator lever.
The control lever positions between neutral and MAX are proportional to the speed set at the gas lever. To familiarise yourself with how to operate the appliance (about thirty minutes) you should start the appliance on level ground without spectators.

Note

Before you use the appliance to mow your lawn you should familiarise yourself with the appliance's new controls.

Start the appliance and move the accelerator lever to the centre position (mid engine speed), leaving the PTO at OFF. Moving the control levers causes the appliance to move slowly and you can now familiarise yourself with the controls.

- Start the engine as stated.
- Let the engine warm up
- Move the accelerator lever into position
- Pull both drive control levers (1) inwards, into neutral (Fig. 12)

Warning

Always keep both hands on the drive control levers. When driving never let go of the drive control levers. Always move the drive control levers by hand to neutral to slow or stop the appliance.
Always move the drive control levers slowly. Abrupt and hasty movements and too tight curves can cause the appliance to imbalance and tip over for potentially serious accidents. Be particularly careful when reversing.

Note

To slow or stop the appliance move the two control levers slowly and steadily into neutral (Fig. 12).

Driving straight ahead

Fig. 13

Press the two control levers steadily forwards. The further they are pressed forwards, the faster the appliance moves.

Taking a left forward turn

Fig. 14

Push both control levers forwards, with the right control lever slightly ahead of the left one.

Taking a right forward turn

Fig. 15

Push both control levers forwards, with the left control lever slightly ahead of the right one.

On turning

The greater the distance between the two control levers the tighter the turn.

Reversing straight ahead

Fig. 16

Pull back the two control levers steadily. The further they are pulled back, the faster the appliance moves.

Taking a left backward turn

Fig. 17

Pull back both control levers, with the right control lever slightly behind the left one.

Taking a right backward turn

Fig. 18

Pull back both control levers, with the left control lever slightly behind the right one.

Right zero turn

Fig. 19

- You must always first stop the appliance by moving the two control levers to neutral.
- Push the left control lever forwards, at the same time pulling back the right ne.

Left zero turn

Fig. 20

- You must always first stop the appliance by moving the two control levers to neutral.
- Push the right control lever forwards, at the same time pulling back the left one.

On zero turns

During a zero turn one wheel rotates in the forward direction, the other backwards. A badly executed zero turn can damage your lawn.

Right or left pivot turn

Fig. 12

- You must always first stop the appliance by moving the two control levers to neutral.
- Depending on the direction, move the one control lever forwards or backwards with the other one at neutral.

Note

During a pivot turn only the one wheel rotates. The neutral wheel is locked and may cause damage to your lawn.

Slowing or stopping the appliance

- Move the two control levers slowly and steadily to neutral.

Mowing

Never change the direction of motion when the appliance is driving or coasting (see “Driving the appliance”)

- Start the engine as stated.
- Set the throttle lever into position .
- Switch on the cutter deck (PTO).
- Lower the cutters.
- Release the parking brake.
- Pull both drive control levers inwards, into neutral.
- Press the two control levers steadily forwards. The further they are pressed forwards, the faster the appliance moves.

Note

The safety lock system prevents driving in reverse when the cutters are activated (PTO). The cutters are deactivated automatically when both drive control levers are moved to reverse. To switch on the cutter deck again, both drive control levers must be in the neutral or forward driving position. Then the PTO switch must be moved first to the OFF position and then to the ON position.

General information

When adjusting the cutting height and driving speed, ensure that the machine is not overloaded. The length, type, and moisture content of the cuttings may necessitate adjustments to the cutting height and drive speed.

Additional safety information on the drive

If the appliance drifts to one side when it should be driving straight ahead or the appliance creeps in neutral:

– *switch OFF the appliance and contact a specialised workshop before using the appliance again.*

The best way to mow

Cut the first two rounds so the cut grass is thrown out sideways into the middle.

- Never allow the grass to grow too long.
- Never cut the grass too low.
- Drive in a straight line.
- Never mow at high speed,
- particularly when a mulching kit or grass catcher is installed.

Note

This appliance is designed to mow lawns. Do not mow scrub, weeds, or overlong grass.

Switching off the machine

- Stopping the appliance.
- Move the two drive control levers into the outer neutral recesses.
  In this position the parking brake is also activated at the same time.
- Switch OFF the cutters (PTO).
- Raise the cutters to the top.
- After twenty seconds turn the ignition key to “ STOP /0”.
- Remove the ignition key.

Pushing the appliance

Fig. 24

Push the appliance only when the engine is switched OFF.

- Release the parking brake. To do this, move both drive control levers inwards into the neutral position (Fig. 12).
- Release both gears (on left and right): Pull out both levers (A) and press to right.

Before starting the engine move back the two gear release levers to their home positions.

Note

Never tow the appliance. This can cause serious damage to the gears.

Tips on lawn care

Tips for a healthy and uniform lawn

Mowing

Lawns consist of various grass types. Frequent mowing promotes the growth of grass, resulting in strong roots and a firm sward. If you seldom cut the grass, you will enhance the development of high-growing types of grass and other weeds, such as clover, daisies). The normal height of a lawn is approx. 4–5 cm. The grass should only be cut back by $^1/_3$rd of the overall height at any one time, Try not to cut the grass shorter than 4 cm, otherwise the lawn will suffer during dry periods. If the grass has grown particularly high (forexample, during a holiday period), cut it back to its normal height in several stages.

Mulching with accessory (optional)

The grass is chopped up fine (approx. 1 cm) during mowing and is left on the lawn. The lawn therefore retains a lot of nutrients. Please note the following:

- Do not mow wet grass.
- Never mow more than max. 2 cm of the total grass length.
- Drive slowly.
- Have the engine at max. rpm.
- Clean the mower cover regularly.

Transporting the appliance

If changing location, drive the lawn tractor short distances only. Otherwise transport it by vehicle.

Note: The mower is not approved for public thoroughfares in accordance with StVO.

Short distances

Danger

Solid objects may be hit/propelled by the rotating cutting mechanism causing damage.

- Always switch off the cutting mechanism before moving the appliance.

Long distances

Warning

Transport damages

The mode of transport used (e.g. transport vehicle, loading ramp) must be used in accordance with guidelines (refer to the respective operating instructions). When transporting, secure the appliance against slipping.

Environmental hazard from leaking fuel

The appliance must not be tilted when it is transported.

- Have the transporting vehicle ready.
- Lay the loading ramp to the transporting vehicle.

- Set the appliance to idle, release the gear lock (for appliances with hydrostatic drive only), and push it by hand on the loading platform.
- Lock the parking brake.
- Secure the machine to prevent it from moving.

Cleaning/Servicing

⚠ ***Danger***

Risk of injury through the engine being unintentionally started.

Protect yourself from injury.
Before doing any work to this appliance:
- *turn the engine off,*
- *remove the ignition key,*
- *lock the parking brake.*
- *wait until all moving parts have come to rest and the engine has fully cooled.*
- *remove the spark plug connector on the engine in order to prevent the engine from accidentally being started.*

Cleaning

Cleaning the machine

⚠ ***Warning***

Do not use a high-pressure cleaner for cleaning the vehicle.

- If possible, clean the machine directly after mowing.
- Park the unit on a solid, even surface.
- Lock the parking brake.

Cleaning the cutting mechanism

⚠ ***Danger***

Injury hazard due to sharp cutting blade

Wear protective gloves.
If the unit has more than one cutting mechanism, moving one cutting mechanism may cause the other cutting mechanisms to move as well.
Take special care when cleaning cutting mechanisms.

⚠ ***Warning***

Damage to engine

The mower must not be tilted to an angle greater than 30°.
Fuel may run into the combustion chamber causing engine damage.

- Raise the cutting mechanism fully.
- Clean the area surrounding the blade using a scrubbing brush or cloth.

Cutters with cleaning nozzle (optional)

Fig. 30

Place the appliance on an even surface free of debris, stones, etc., and engage the locking brake.

- Use a commercially available quick-release coupling to attach a water hose.
- Start the engine.
- Lower the cutters, and switch ON for a few minutes.
- Switch OFF the cutters and engine.
- Detach the water hose.

Repeat this steps for the second cleaning nozzle (if provided).
At the end of cleaning:

- Raise the cutters to the top,
- start the engine, and switch ON the cutters for a few minutes to dry them.

Servicing the vehicle

Observe the servicing guidelines in the engine manual. At the end of the grass-cutting season, have the appliance checked and serviced in a specialist workshop.

⚠ ***Warning***

Risk of pollution from engine oil

Pass on any waste oil which comes about through an oil change to a collection point or a waste disposal company.

Threat to the environment through batteries

Used batteries do not belong to domestic rubbish. Pass on used batteries to a dealer or a waste disposal company.
Dismantle the battery before the vehicle is scrapped.

Using jump leads

⚠ ***Danger***

Never bridge a defective or frozen battery with jump leads. Ensure that the units and the jump lead clips do not touch each other and that the ignitions are switched off.

- Connect the red jump lead to the positive terminal (**+**) of the flat battery and the donor battery.
- Connect the black jump lead first to the negative terminal (**–**) of the donor battery. Connect the other clip to the engine block frame of the vehicle with the flat battery (as far away from the battery as possible).

ⓘ **Note**

If the donor battery is installed in a vehicle, this vehicle must not be started during the jump starting process.

- Start the vehicle with the flat battery and actuate the parking brake.
- Disconnect the jump leads in reverse sequence.

Tyre pressure

⚠ ***Warning***

Never exceed the maximum permitted tyre pressure (see side of tyre).
When pumping up the tyres, do not stand in front or above them.

Over-inflating reduces the longevity of the tyres. Tyre pressure should be checked before every journey.

After 5 operating hours

- First engine oil change. See engine manual for subsequent intervals.
- Use the oil channel or (optional) quick oil drain (Fig. 23).

Every 10 operating hours

- Lubricate all cutter shafts, idlers, and idler mounts with 251H EP type grease applied to their respective grease nipples. This work should be performed at a specialised workshop.
- Lubricate the wheel bearings and front wheel axes with 251H EP type grease applied to their respective grease nipples.
- Remove grass and dirt from around the blade shafts under the covers. This work should be performed at a specialised workshop.

Every 50 operating hours

- Grass residue and other soiling on the drive gears must be removed at a specialised garage.

Every 2 months

- For battery type 2 only: fill the battery cells with distilled water to 1 cm below the filler hole.

If necessary

Charging the battery

Check the battery's charged state with a voltmeter. When the charged state is less than 12.6 V (DC) recharge the battery (max 12 V at 6 A) with a battery charger in accordance with the table.

Voltmeter display	Battery charging state	Charging time
12.7 Volt	100 %	–
12.4 Volt	75 %	approx. 90 Min.
12.2 Volt	50 %	approx. 180 Min.
12.0 Volt	25 %	approx. 280 Min.

ⓘ **Note**

Observe the information in the operating instructions for your battery charger.

Replace the fuse

- Replace defect fuses only with the equivalent rating.

Once a season

- Lubricate the steering linkage with a few drops of light oil.
- Lubricate all moving parts and bearing surfaces with a few drops of oil (control levers, cutting height adjustment).

- Clean the spark plug and check the gap between the electrodes or replace the plug. See engine handbook.
- The rear axles must be lubricated with a special-purpose (water-repellent) grease at a specialised garage.
- Have the cutting blade sharpened or replaced in a specialist workshop.

Removing/Installing and adjusting cutter deck

⚠ ***Danger***

Risk of injury through the engine being unintentionally started.

Protect yourself from injury.
Before doing any work to this appliance:
- *park the appliance on a level surface,*
- *turn the engine off,*
- *remove the ignition key,*
- *switch off PTO,*
- *lock the parking brake.*
- *wait until all moving parts have come to rest and the engine has fully cooled.*
- *remove the spark plug connector on the engine in order to prevent the engine from accidentally being started.*

⚠ ***Danger***

Risk of injury from sharp cutting blade.

Wear protective gloves.

Disassembly

Fig. 25 and 26
- Install the cutter wheels at the highest position.
- Raise the cutters to the top.
- To release the tension on the V belt, press the tensioning arm (1) in the direction of the arrow (Fig. 25).
- Remove the V belt from the PTO clutch. (motor pulley).
- Lower the cutters.
- Remove fixing bracket from the cutter deck (Fig. 28a). Pull cotter pin (1) and pull the fixing bracket (2) out of the holder.
- Withdraw the pin (4) to disconnect the cutters from the suspension (2) (Fig. 26).
- Repeat these steps on the left side of the appliance. Note – In doing so, support the cutters firmly so that they cannot simply drop to the ground.
- Move the cutting height setting lever into the top catch.
- Pull out the cutters from beneath the appliance.

Assembly

Fig. 26

To reinstall the cutters perform the above steps (for removing the cutters) in reverse order. Work proceeds faster when you are assisted by a second person.
Make sure that the suspension units (2) are in their respective recesses (3) on the cutter mount (1) and the pin (4) has engaged correctly.

Setting the cutter level

When mowing does not appear to be parallel to the lawn the cutters can be aligned.

Note

Before aligning the cutters check the tyre pressure on the appliance.

Setting the side level

Fig. 27
- Raise the cutters to the top.
- Carefully turn the outer cutters (risk of injury) transverse to the drive direction.
- Measure the distance between the ground and the ends of the two outer cutters. The result should be identical. To obtain the correct level you may have to turn the adjusting segment (2) on the right cutter side. To do so first loosen (but do not remove) the cap bolt (1) and retighten this after the adjustment.

Set the level from front to back.

Fig. 28b

Note

Set/check the side level before this adjustment.
- Raise the cutters to the top.
- Carefully turn the outer cutters (risk of injury) parallel to the drive direction.
- Measure the distance between the ground and the end of the right cutter. The end of the front cutter should be about 3.2–6 mm lower than the end of the rear cutter.
  You may have to adjust the front receiver (2). To do this, set the correct level by adjusting the nuts (3).

Shutting down the machine

⚠ ***Warning***

Damage to mower materials

Store the mower with engine cooled down only in clean, dry areas.
Always protect the mower against rust if it is to be left for comparatively long periods, e.g. over the winter.

At the end of the grass-cutting season or if the mower is not going to be used for longer than one month:
- Clean the mower and the grass catcher.
- Protect all metal parts against rust by wiping them using an oiled cloth or spray with spray oil.
- Recharge the battery using a battery charger.
- Before winterising the appliance, remove the battery. The battery must then be charged and kept in a dry, cool place (protected againstfrost), and recharged every 4 to 6 weeks and before the next use.
- Drain out the fuel (in an open space) and prepare the engine for storage as described in the handbook for the engine.
- Inflate the tyres in accordance with the specifications on their walls.
- Park the mower in a clean, dry room.

Guarantee

In each country, the guarantee conditions apply which are given out by our company and/or the importer.

We are happy to repair damage to your appliance free of charge within the scope of the guarantee in as far as the damage is believed to be caused by a material or a manufacturing fault. In making a claim against the guarantee, refer to place where the vehicle was sold or the nearest branch office.

Information about the engine

The engine manufacturer is liable for all problems related to the engine regarding performance, measuring performance, technical data, guarantee and service.
You will information in the separately enclosed owner's/operator's manual provided by the manufacturer.

Troubleshooting

⚠ ***Danger***

Risk of injury through the engine being unintentionally started.

Protect yourself from injury.
Before doing any work to this appliance:
- *turn the engine off,*
- *remove the ignition key,*
- *lock the parking brake.*
- *wait until all moving parts have come to rest and the engine has fully cooled.*
- *pull off the cap of the spark plug so that the engine cannot inadvertently start.*

Faults when operating your appliance often have simple causes which you should know about and which you can partly deal with yourself. In case of doubt, your specialist garage will be happy to help you further.

Problem	Possible cause(s)	Remedy
Engine not running.	Safety lock system activated.	To start the engine, sit on the driver's seat and move both drive control levers into the outer recesses of the neutral position. Switch off power take-off shaft switch (PTO).
	Battery not connected properly.	Connect the red cable to the positive (+) terminal on the battery and the black cable to the negative (–) terminal on the battery.
	Empty or weak battery.	Check the battery, charge it or exchange it.
	Fuse has tripped.	Exchange fuse. If the fuse trips repeatedly, find the cause (usually short-circuit).
Starter runs, but engine does not start.	Choke and throttle at wrong position.	Actuate the choke. Move throttle to 🐇 .
	Carburettor not receiving any fuel, fuel tank empty.	Top up with fuel.
	Defective or dirty spark plug.	Check spark plug; see engine manual.
	No ignition spark.	Have ignition checked in repair shop.
Engine emits smoke.	Too much oil in engine.	Switch OFF appliance immediately. Check engine oil level.
	Defective engine.	Switch OFF appliance immediately. Get the engine checked in a specialist garage.
Excessive vibration.	Damaged blade drive shaft or defective cutting blade.	Switch OFF appliance immediately. Have defective parts replaced in a specialist workshop.
Cutting mechanism does not discharge grass or cuts unevenly.	Engine speed too low.	Increase throttle.
	Travelling speed too high.	Set to a lower travelling speed.
	Cutting blade is blunt.	Arrange for service agent to sharpen or replace blade.
Engine is running, cutter deck is not mowing.	V-belt torn.	Have the V-belt replaced in a repair shop.