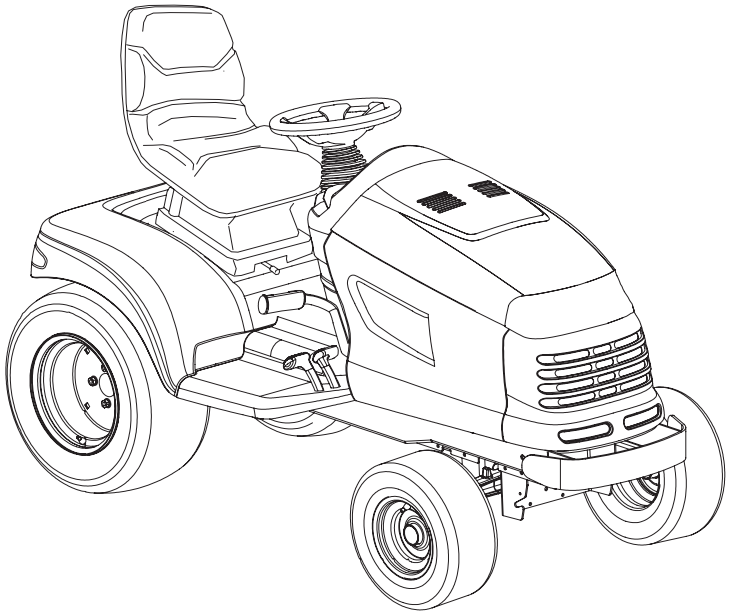

J 06
FORM NO. 770-10239C

MTD Products Aktiengesellschaft • Saarbrücken • Germany

1

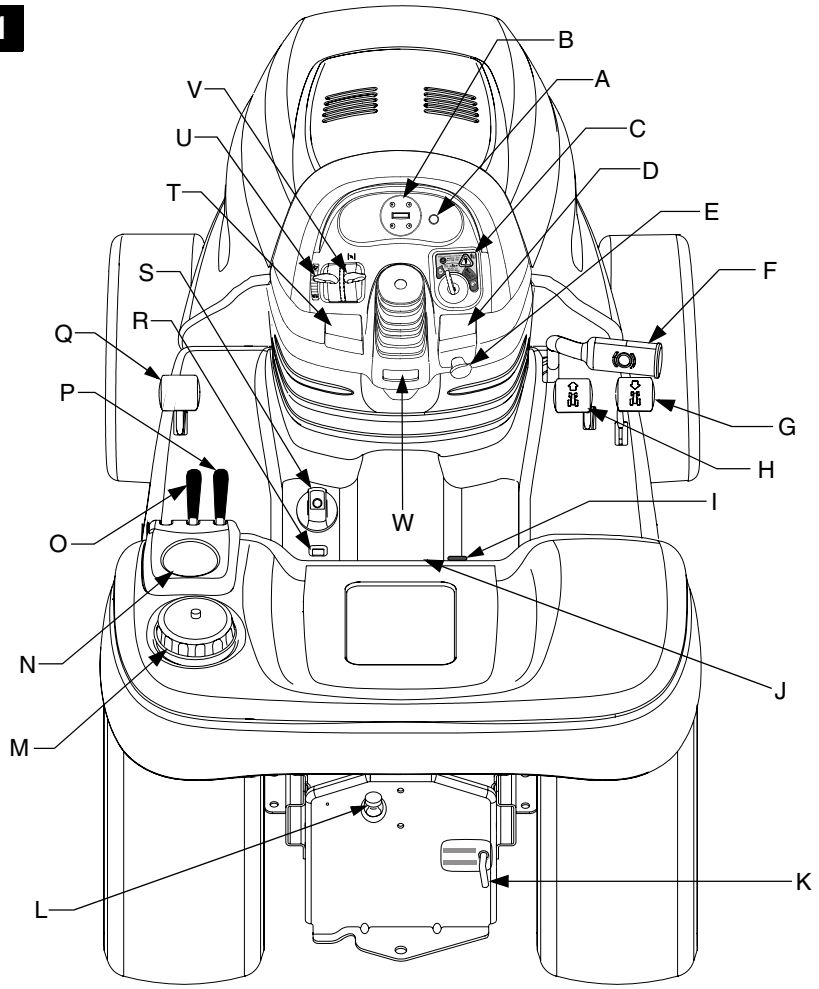

2

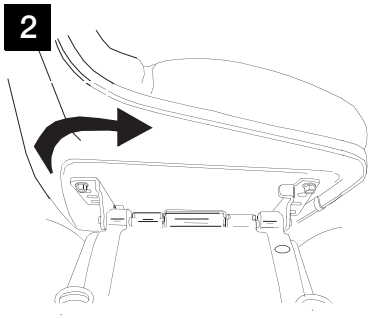

3

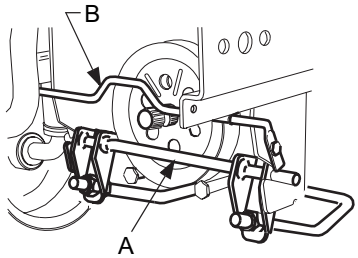

4

5

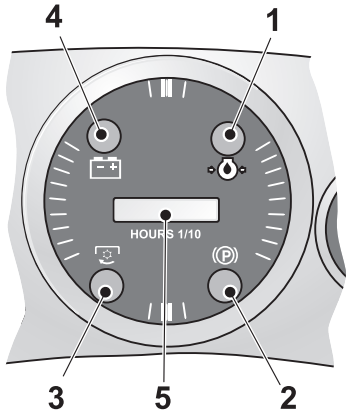

6

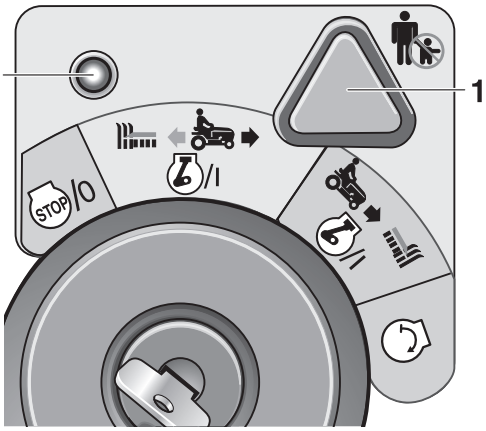

7

8

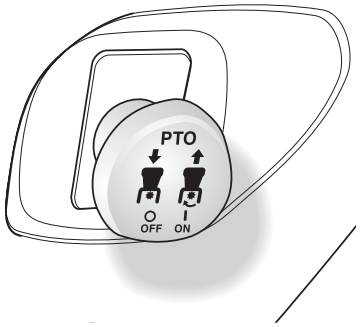

9

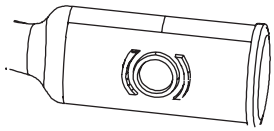

10

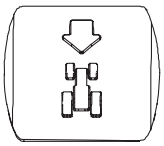

11

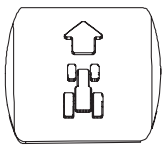

12

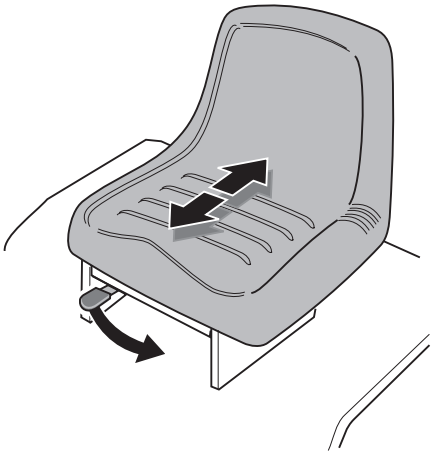

13

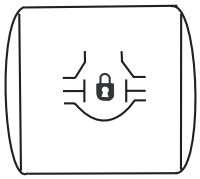

14

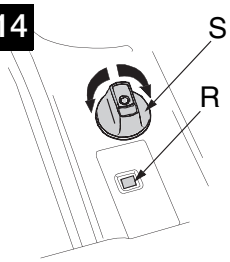

15

16

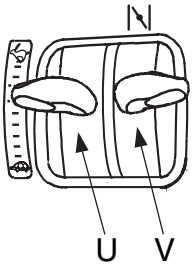

17

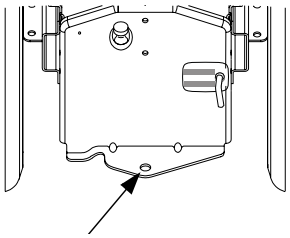

18

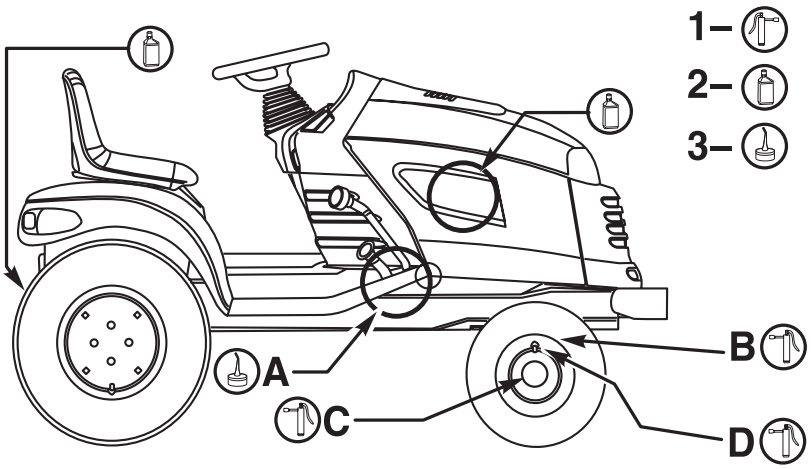

19

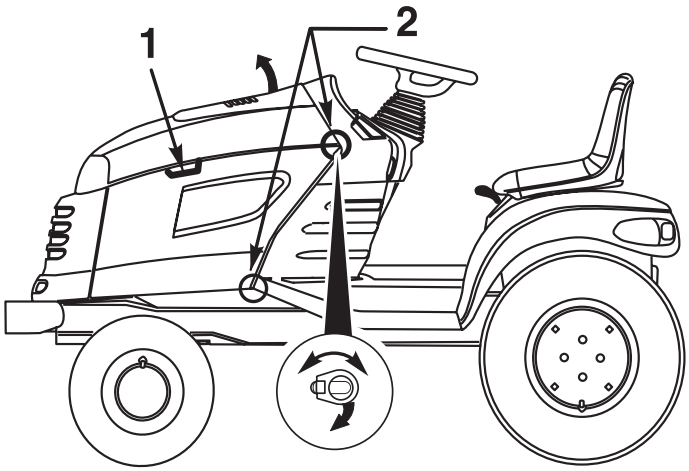

20

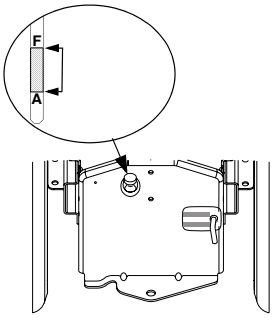

21

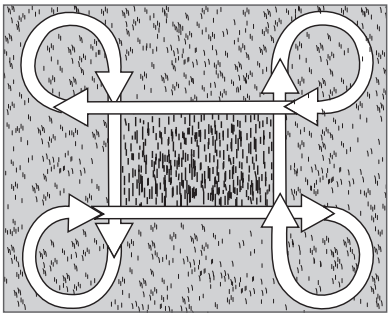

22

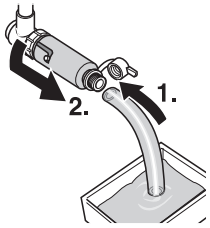

23

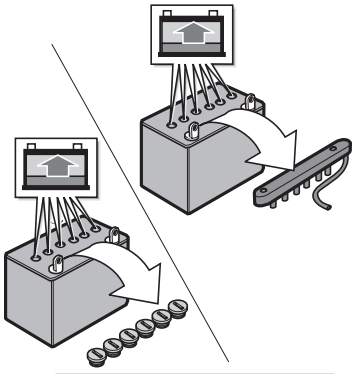

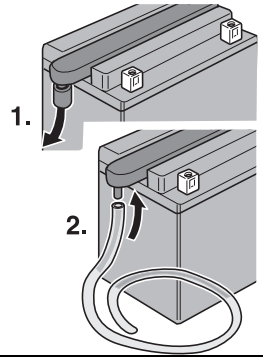

24

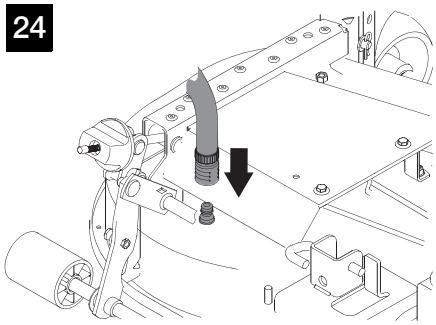

English → 4

Français → 13

Deutsch → 23

Nederlands → 32

Español → 42

Svenska → 52

Dansk → 60

MTD Products Aktiengesellschaft
Industriestraße 23
D-66129 Saarbrücken
Germany
☎ ++ 49-6 80 57 90 • ++ 49-6 80 57 94 42

AT

MTD Handelsgesellschaft mbH
Welser Straße 122
4614 Marchtrenk
☎ 07 24 26 05 55
07 24 26 05 54

DA

MTD Denmark ApS
Messingvej 30 A
8900 Randers
☎ 87 11 91 00
87 11 96 00

HU

MTD Hungária Kft
Dózsa György út 1
8248 Nemesvámos
☎ 06 88 51 55 00
06 88 50 55 20

BE NL L

MTD Benelux N.V.
Prins Albertlaan 96
B-8870 Izegem
☎ ++32-51 40 24 41
++32-51 40 37 75

FR

MTD International France
B.P. 453 Saint-Etienne du Rouvray
76806 Cedex
☎ 02 32 91 94 32
02 32 91 94 36

SV

MTD Trädgårdsmaskiner
Sätunavägen 3
52141 Falköping
☎ 0 51 51 71 00
0 51 57 11 41 4

DE

MTD Motorgeräte GmbH
Industriestraße 9–11
73054 Eislingen / Fils
☎ 0 71 61 85 05 0
0 71 61 85 05 70

EN

E.P.Barrus LTD
Launton Road
OX6 0UR Bicester, Oxfordshire
☎ 0 18 69 36 36 36
0 18 69 36 36 20

CH

MTD Schweiz AG
Allmendstraße 14
5612 Villmergen
☎ 05 66 18 46 00
05 66 18 46 09

PL

MTD Poland sp. z o.o.
UL. Ogrodnicza 1
84-252 Orle
☎ 058 57 20 701
058 57 20 699

© 2007 MTD Products AG

Table of Contents

For your safety 4
Assembling the appliance 5
Operation and Display Elements 6
Operating safety 7
Mowing 9
Transporting the appliance 9
Cleaning / Servicing 10
Shutting down the machine 11
Warranty. 11
Engine 11
Troubleshooting 12

Information on the nameplate

This information is very important for the identification of your unit when ordering replacement parts and for customer service.

Enter all information from the nameplate of your tractor into the following box.

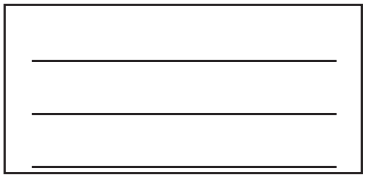

This and other information on the unit can be found on the separate CE Declaration of Conformity which is a component of these operating instructions.

For your safety

Using the unit appropriately

The unit is intended for use
- as a garden tractor for mowing grass in private gardens,
- as a garden tractor for mowing grass commercially, i.e. park greens, sports areas, and golf courses,
- in accordance with the descriptions and safety information contained in these Operating Instructions.

Furthermore, the unit can be used, together with accessories deemed by the manufacturer as compatible, to plough snow, or to transport mown grass or loose clay, for example.

This unit is not intended for purposes beyond those listed above. The operator is liable for all damages to third parties and their property.

It is not authorised to use any units of this series on public roads or for transporting people.

Use the unit under the technical conditions prescribed by the manufacturer and in which the unit is supplied.

The manufacturer accepts no responsibility for damages resulting from unauthorised alterations to the unit that have been carried out by the owner or operator.

General safety instructions

Before you use this machine for the first time, carefully read all instructions in this guide and observe them accordingly.

Inform all other users how to use the unit correctly.

Use the unit under the technical conditions prescribed by the manufacturer and in which the unit is supplied.

Keep these Operating Instructions in a safe place and have them at the ready whenever you use the unit.

These Operating Instructions should be given to the subsequent owner in the event of the unit changing hands.

Replacement parts must comply with the requirements specified by the manufacturer. You should therefore only use original replacement parts or those deemed compatible by the manufacturer.

Have repair work carried out by aspecialist workshop only.

Before working with the unit

Any person intending to use this machine must not be under the influence of intoxicants such as alcohol, drugs or medicines.

Persons under the age of 16 may not operate the unit. Bylaws may stipulate a different minimum age.

Familiarise yourself with all features and control elements, and their functions, before using the unit.

Store fuel in appropriate containers only, and never in the vicinity of heat sources (e.g. ovens or hot-water cylinders).

Replace the exhaust, fuel tank or fuel cap immediately if they become damaged.

Attach trailers and accessory equipment in accordance with the guidelines. Driving performance, especially steering, braking capability, and overall stability are affected by attachments, towed items, ballast weights and the weight of a grass catcher when full.

While working with the unit

While working with or on the machine, wear appropriate clothing (e.g. safety shoes, long trousers, close-fitting clothes, protective goggles).

The unit should only be operated when it is in perfect working order.

Never refuel the unit while the engine is running or hot. Refuel the unit in open spaces only.

Open fire or sparks must be avoided and you should not smoke while refuelling the unit.

Ensure that no persons, especially children, or animals are in the area of operation.

Check the area in which you intend to use the unit and remove all objects that could be hit and propelled by the unit. You can thus avoid injuries and damage to the unit.

Never mow on slopes that are steeper than 20 %. Working on slopes is dangerous; the risk of rollover and sliding is increased. When working on slopes, always drive off and halt the unit gently and gradually. The transmission should always be engaged when driving down a slope – never coast – and drive at a low speed. Never drive across the face of a slope, always up and down the slope.

Only use the unit in daylight or with a sufficient level of artificial lighting.

The unit is not authorised for the transport of people. Never allow passengers on the unit.

Before all work on the unit

Protect yourself against injury. Before all work on this unit
- Switch off the engine.
- Take out the ignition key.
- Actuate the parking brake.
- wait until all moving parts have come to rest and the engine has fully cooled,
- pull off the cap of the spark plug so that the engine cannot inadvertently start.

After working with the unit

Only leave the unit unattended after you have switched off the engine, engaged the parking brake and withdrawn the key from the ignition.

Safety features

Safety features serve to protect you and must always be functional.

You may not make any alterations to the safety features or circumvent their proper functioning.

Safety features are:

Discharge flap on the cutter deck

The grass flap protects you against possible injuries resulting from the cutting blade or objects that are propelled by it. The unit may only be operated with the grass flap attached.

Safety lock feature

With the safety lock feature, the engine can only be started if
- he driver is sitting on the driver seat,
- the brake pedal is fully depressed, and/ or the parking brake is engaged,
- the engage switch (PTO) is switched off.

The safety lock feature switches off the engine automatically as soon as the driver leaves the driver seat without engaging the parking brake and/or without having switched off the engage switch (PTO).

The safety interlock system automatically switches off the clutch switch (PTO) as soon as the reverse pedal is depressed (provided the OCR function has not been activated). To turn on the engage switch (PTO) again, you must first switch it off and then switch it on again.

Symbols on the unit

Various symbols are on stickers on the unit. These symbols are explained below:

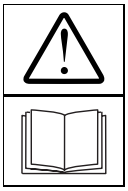

Caution! Please read the operating instructions before putting lawnmower into operation!

Keep third parties away from the danger area!

Risk of injury from propelled grass or solid objects that are propelled.

Risk of injury from rotating blades and other rotating parts.

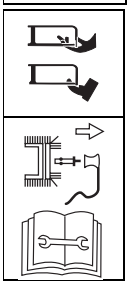

Always remove the spark plug connector before working on the cutters! Keep fingers and feet well away from the cutters! Always switch off the appliance and remove the spark plug connector before adjusting, cleaning or checking it.

There must be no persons, especially children, or animals in the area of operation.

Working on steep slopes increases danger.

Caution!
Risk of explosion.

Battery acid/
Risk of injury.

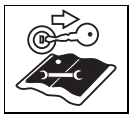

Withdraw the key from the ignition before all work on the unit and observe the instructions in this document.

Ensure that these symbols on the unit remain legible and are not obscured or covered.

Symbols in these Operating Instructions

The following symbols are used in these instructions:

⚠ ***Danger***

This informs you of the potential dangers associated with the described activity that represent a risk of injury.

⚠ ***Caution***

This informs you of the potential dangers associated with the described activity that might result in damage to property.

ⓘ **Note**

This indicates important information and application tips.

Positional information

Where a position on, or in relation to, the unit is described (e.g. left, right), this is always from the perspective of the driver, sitting on the driver seat and facing forward.

ⓘ **Note**

The illustrations may differ in detail from the machine which you have purchased.

Assembling the appliance

Commissioning the battery

⚠ ***Danger***

Risk of poisoning and injury from battery acid

Wear protective goggles and gloves. Do not allow battery acid to come into contact with the skin. Should battery acid splash into your face or eyes, wash immediately with cold water and consult a doctor. Should you inadvertently swallow battery acid, drink plenty of water and consult a doctor immediately. Store batteries in a safe place out of the reach children.

Never tilt the battery; the battery acid may run out. Bring the remaining, unused battery acid to your dealer or to a waste disposal company.

⚠ ***Caution***

Risk of fire, explosion and corrosion from the battery acid and emitted gases

Should battery acid spill or splash onto parts of the unit, clean it off immediately. Battery acid has corrosive effects.

Do not smoke. Keep burning and hot objects away from the battery and battery acid. Charge the battery in well-ventilated, dry enclosures only. A short-circuit may occur when working on the battery. Never lay tools or metal objects on the battery.

If a “maintenance-free/sealed” battery (type 1) is supplied

(Battery without filler plugs)

The battery is filled with battery acid and sealed in production. However, even a “maintenance-free” battery requires maintenance if it is to have a longer service life.

- Keep the battery clean.
- Avoid tilting the battery or turning it over. Even a “sealed” battery will leak electrolyte if is tilted or turned over.

If an empty battery (type 2) is supplied

(Battery with filler plugs)

Figure 23

- Remove the filler plugs of the battery cells.
- Fill each cell slowly with battery acid up to 1 cm below the filling opening.
- Leave the battery to stand for 30 minutes so that the lead can soak up the battery acid.
- Check the level of the battery acid, add more if necessary.
- Before using the battery for the first time, charge it using a battery charger (max. charging current 12 Volt / 6 Ampere) for 2 to 6 hours. After charging the battery, first unplug the charger and then disconnect the battery (see also the operating instructions for the battery charger).
- Re-insert the filler plugs of the battery cells.
- Install the battery in the unit.
- Remove the strip seal from the battery vent. Connect the venting hose so that the free end points downwards in the appliance. The hose must always allow free passage! (Figure 23)
- First connect the red cable (+), and then the black cable (–).

- Thereafter, use only distilled water to top up the battery (check every 2 months).
- Keep the battery clean.

⚠ ***Caution***

Note the order of terminals when connecting and disconnecting the battery.

Installation:

- First connect the red cable (+ / positive post), and then the black cable (– / negative post).

Removal:

- First disconnect the black cable (– / negative post), and then the red cable (+ / positive post).

Servicing the battery (type 1/2)

Before leaving the unit idle for a longer period, it is advisable to remove the battery and charge it. The battery should be charged every 2 months during the idle period (off season), and also before re-commissioning the unit at start of season (consult a specialist workshop for further information).

Installing the seat

Figure 2

For transport reasons the mounted seat may be offset to one side.

- Remove the seat's screws.
- Turn the seat in the drive direction.
- Secure the seat with the screws.

Removing the front mower receiver

Figure 3

For transport reasons the front mower receiver (A) is secured to the tractor.

- Remove the cable tie on the mower receiver (A).
- Press down the locking bar (B).
- Remove the mower receiver.
- Pull the locking bar back up.

Note

The mower receiver is needed for detaching the mower.

Operation and Display Elements

⚠ ***Caution***

Damage to the machine.

It is primarily the functions of the controls and display elements which are described here. Do not perform any functions yet!

Figure 1

A Fuel tank lamp
B Display cluster
C Ignition lock with OCR function
D Parking brake
E PTO-switch
F Brake pedal
G Reverse pedal
H Forward pedal
I 12 V socket
J Adjusting lever for seat
K Gear release lever
L Dipstick for gear oil
M Filler inlet for fuel
N Can holder
O central hydraulics lever
P auxiliary hydraulics lever (optional)
Q Differential lock pedal (optional)
R Central hydraulics height indicator
S raise / lower mower button (optional)
T Speed control
U Throttle
V Chokelevel
W steering wheel adjusting lever (optional)

Note

Steering wheel and seat not shown.

Steering wheel

The tractor is fitted with (optional) power steering. Owing to this optional feature the installed steering wheel may be offset from the centre.

Fuel lamp (A)

Figure 4

This indicator lamp lights up when the fuel level is low. Please refuel.

Display cluster (B)

Figure 5

The display cluster can consist of the following elements, depending on the model.

Oil pressure (1):
When this indicator lamp lights up and the engine is running, immediately switch off the engine and check the oil level.
If necessary, consult a garage.

Brake (2):
Indicator lamp lights up if the brake pedal is not depressed or the parking brake is not locked when the engine starts.

Cutter deck (PTO) (3):
The indicator lamp lights up when the cutters are not switched OFF at engine start (PTO).

Battery charge indicator (4):
When this indicator lamp lights up and the engine is running, the battery is low. If necessary, consult a garage.

Engine hour indicator/battery voltage (5):
Indicates the operating hours in hours and $^{1}/_{10}$ hours on the display.

Note

When the ignition is switched on, the battery voltage is displayed briefly and then the display switches to operating hours.

Operating hours are always counted except when the ignition key is on "Stop" or has been removed.

Note

Every 50 operating hours (depending on model) oil change "CHG/OIL" is indicated on the display for a period of 5 minutes. This message is indicated for the next 2 operating hours. See engine handbook for oil change intervals.

Ignition lock with OCR function (C)

Figure 6

This ignition lock features an OCR function (= user-controlled mowing in reverse gear).

Start:
Turn the key to the right until the engine is running, then release. The key is at /I/ (normal position) that lets you mow in the drive direction.

OCR position:
Turn key to left of normal position to reverse mowing position /I/ and press the switch (1). The indicator light (2) comes on and indicates to the user that the unit can now mow in reverse and forward gear.

Stopping:
Turn the key to left to STOP/0.

Parking brake (D)

Figure 7

Actuate the parking brake:
Press down the brake pedal fully, and press the switch.

Releasing the parking brake:
Press down the brake pedal fully, the switch disengages.

PTO-switch (E)

Figure 8

The PTO switch actuates an mechanical clutch to switch ON and OFF the cutters.

ON = pull the switch.

OFF = press the switch.

Note:
When the safety lock system has automatically switched OFF the appliance (e.g. when reversing with activated cutters), first switch ON and then OFF the PTO switch to release the lock on the clutch.

Brake pedal (F)

Figure 9

The brake pedal can be used to brake quickly, to engage and disengage the locking brake, and to switch OFF speed control.

Reverse pedal (G)

Figure 10

This controls the vehicle speed in the reverse direction.

Forward pedal (H)

Figure 11

This controls the vehicle speed in the drive direction.

Forward / reverse drive pedal

Release the pedal to stop and before changing direction.

12 V socket (I) (optional)

Figure 1

Maximum current output 12 V/5 A

Adjusting lever for seat (J)

Figure 12

The driver's seat can be set with the seat adjustment lever.

Gear release lever (K)

Figure 1

Before you can push the appliance with the engine switched OFF, you must first pull out and then push down this lever. To drive the appliance again, push up and press in the lever.

The lever is situated on the rear panel of the machine.

Dipstick for gear oil (L)

Figure 1

Filler inlet for fuel (M)

Figure 1

Can holder (N)

Figure 1

Central hydraulics lever (O)

Figure 1

This raises and lowers the mower

Central hydraulics lever (P) (optional)

Figure 1

This raises and lowers auxiliary attachments (e.g. rake blade).
The connector sockets are installed on the front left of the tractor frame.

Differential lock pedal (Q) (optional)

Figure 13

Press the pedal to activate the differential lock. Power is now transferred to both rear wheels (see Section "Activating the differential lock").

Auxiliary hydraulics lever (R)

Figure 14

This shows the mower's set height.

Raise / lower mower button (S) (optional)

Figure 14

Every full turn corresponds to about 0.6 cm. There are four latching positions per turn. The mower then lowers to the set height only.

Note

Set the height only when the mower is not attached.

Speed control (T)

Figure 15

Press the switch.

The forward speed selected at this point (but not top speed) is maintained, and the drive pedal can be released.

When the accelerator pedal or the brake pedal is depressed, the cruise control automatically switches off.

Throttle lever (U)

Figure 16

The engine speed can be adjusted continuously.
Fast engine speed = .
Slow engine speed = .

Chokelevel (V)

Figure 16

Set the choke to |\| when starting a cold engine.

Steering wheel adjusting lever (optional)

Figure 1

This adjusts the position of the steering wheel.

Operating safety

Also follow the instructions in the engine handbook!

⚠ ***Danger***

Risk of injury

No person, especially children, and/or animals should be allowed to stand close to the mower while it is in use. They could be injured by stones or similar objects that might be thrown out. Under no circumstances may the unit be operated by a minor.

Be particularly careful when mowing in reverse gear (units with OCR switch). Ensure that all persons are outside the working area of the unit.

Never empty the grass catcher while the engine is still running. While emptying the grass catcher, you yourself or some other person could be injured if the contents of the catcher are ejected at high speed.

When mowing on steep slopes, there is a risk of the mower tipping over and you could be injured as a result. Never drive across the face of a slope, always up and down the slope. The mower should not be driven on slopes with a maximum incline greater than 20 %. Never turn on a slope.

When mowing wet grass, there is a greater risk of the unit sliding as a result of reduced wheel grip. This can result in the unit crashing.

Excessive speed can increase the risk of an accident.

Maintain a safe distance at all times from particularly steep slopes, trees, bushes and hedges.

Be particularly cautious when driving in reverse.

Check the area in which you intend to use the unit and remove all objects that might be hit and propelled by the unit.

If the cutting tool hits a foreign object (e.g. stone) or if the machine starts vibrating violently: stop the engine immediately. Examine the unit for damages. Consult a specialist workshop if damage has occurred.

In the case of mowers with rotary blades, never stand in front of grass ejection holes.

Never place your hands, feet, or other parts of the body near rotating parts.

Switch OFF the engine, remove the ignition key, and disconnect the spark plug terminal before you clear the ejector of blockages and other hindrances.

Risk of suffocation from carbon monoxide

Run the internal combustion engine outdoors only.

Risk of explosion and fire

Petrol vapour is explosive and petrol itself is extremely flammable.

Fill up will petrol before you start the engine. Always keep the fuel tank sealed while the engine is running and while it is still hot.

Only refuel the unit when the engine is switched off and fully cooled. Open fire or sparks must be avoided and you should not smoke while refuelling the unit.

Refuel the unit in open spaces only.

If fuel has spilled, do not start the engine. Push the mower away from the area where the petrol was spilt and wait until the petrol fumes have evaporated.

To avoid fire hazard, keep the following parts free of grass and escaping oil: engine, exhaust, battery, fuel tank.

⚠ ***Danger***

Injury hazard due to defective mower

The unit should only be operated when it is in perfect working order.

Conduct a visual check before each use. Check in particular the safety features, cutting tools and mountings, operation elements, and threaded joints for damage and secureness.

Always replace damaged parts before operating the unit.

Operating times

Observe the national or bylaws for the times you may operate the appliance. You may have to consult your local authority.

Before each use

Note

The engine has already been filled with oil at the factory – please check the oil, if required refill.

Check:

- all protective features,
- the engine-oil level (see the engine handbook),
- the gear-oil level (see below),
- the fuel level (see below),
- the tyre pressure (see side of tyre),
- the side covering and the area around the air filter for dirt and grass,
- the cutting mechanism for dirt and grass,

Check the fuel level:

- Open the tank and add fuel as required (refer to the engine handbook to determine the correct type of fuel).
- Wipe away any spilt fuel.

Check the level of the gear oil (Fig. 20):

- Withdraw the dipstick from the filler opening.
- Wipe off the dipstick.
- Check the oil level. The oil level should be between the two markings.
- Clean the area around the filler opening.
- Fill oil into the filler opening (use only “Special Drive System Oil”).
- Re-insert the dipstick and check that it is secure.

Preparing for operation

- Park the tractor on an even, solid surface.
- Engage the parking brake.
- Conduct all work with the engine switched off.
- Withdraw the key from the ignition.
- Before all work on moving parts, open the bonnet and disconnect the lead to the spark plug.

Adjusting the driver seat

Figure 12

- Take your place on the driver seat.
- Adjust the seat to the desired position.

Setting the steering wheel

Figure 1

- Press and keep pressed the lever (W).
- Adjusting the steering wheel.
- Release the lever (W), and make sure that the steering wheel engages correctly.

Setting the cutting height (mower mode)

Note

You can keep your lawn healthy by mowing off no more than $^1/_3$ of the stem length at a time. The cutting height should be increased above the normal level when mowing uneven surfaces.

- Set the cutting height at the raise / lower mower button.
- Set the stabilisers (if fitted) on the mower (see separate mower instructions).

Starting the engine

- Take your place on the driver seat.
- Depress the brake pedal fully or engage the parking brake.
- Switch off the engage switch (PTO).
- raise the cutters to the top,
- Set the throttle lever (Figure 16) to .
- Set the choke (Fig 16) to when starting a cold engine.
- Turn the ignition key (Figure 6) to until the engine is running (attempt to start the engine for max. 5 seconds, wait 10 seconds before attempting to start the engine again).
  When the engine is running, set the ignition key to /I/ .
- Slowly push back the choke (Figure 16).
- Return the accelerator lever (Figure 16) until the engine runs smoothly.

Stopping the engine

- Move the throttle (Fig. 16) to the middle position.
- Let the engine run for approx. 20 seconds.
- Turn the ignition key (Figure 6) to STOP/0.
- Withdraw the key from the ignition.
- Engage the locking brake before leaving the appliance.

Driving the tractor

⚠ ***Danger***

Abrupt takeoff, stopping suddenly, and driving at excessive speeds raise the risk of accidents and can cause damage to the unit.

Never set/adjust the driver’s seat while the unit is moving.

- Start the engine as specified.
- Releasing the parking brake: Press down fully the brake pedal, and release it.
- Slowly engage the drive pedal until you have reached the speed you want.

Stopping the appliance

- Release the accelerator.
- Press the brake pedal until the appliance is stationary.

Keeping the travelling speed constant

- Press the forward pedal slowly forward until the desired travelling speed is reached.
- Press the speed pilot switch. The speed pilot switch holds the forward pedal in this position.
- Take your foot from the forward pedal, the tractor travels at constant speed.
- Cruise control is automatically deactivated by depressing the accelerator pedal or the brake pedal.

Activating the differential lock

⚠ ***Caution***

Risk of accident and damage to the appliance.

– *Activate the differential lock only when driving straight ahead.*
– *Do not activate the differential lock when the appliance is moving (it must first be stopped).*
– *Do not activate the differential lock when driving on roadways or at speed (steering problems – risk of accident).*

Pressing the differential lock pedal to the stop ensures uniform power transmission to both rear wheels when you need greater wheel grip.

Note

Disengaging the differential lock pedal does not always disengage the differential lock. You may have to reduce the tractor's speed or reverse direction (first stop the appliance) before you can disengage the differential lock.

Using the hydraulic lever system

The engine must be running before you can raise an attachment with the hydraulic lever system.

To raise the attachment:

- press back the raising system lever.

To lower the attachment:

- press to the front the raising system lever (this also works when the engine is switched off).

Note

Depending on the model the tractor is fitted with auxiliary hydraulics and two front hydraulic sockets. The hydraulic sockets are used to attach a hydraulic front attachment kit that raises and lowers hydraulically the attached accessories (e.g. rake blade).

Engaging the cutting mechanism or other driven accessories

- Start the engine.
- Set the throttle lever into the middle position.

Engage

- Switch ON the PTO switch.
- Move throttle to .

Disengage

- Switch OFF the PTO switch.

Note

When the tractor is being operated with the engage switch on, the safety lock feature will

- switch off the engine automatically if the driver leaves the driver seat,
- the clutch switch is automatically deactivated for reversing (provided the OCR switch has not been activated).

To turn on the engage switch (PTO) again, you must first switch it off and then switch it on again.

Using the traction gear

Figure 17

- Attach the towing appliances to the lug.

Using the toolbox

A toolbox is installed beneath the driver's seat.

Parking the tractor

- Release the accelerator.
- Press the brake pedal, wait until the tractor stops and engage the parking brake.
- Switch off the engage switch (PTO).
- Turn the ignition key to the 0 STOP position.
- Lower the cutting mechanism or any other accessory equipment.
- Withdraw the key from the ignition.

Mowing

Note

- In normal mowing mode /I/ (see Operation, ignition lock): Before reversing the machine, switch off and raise the cutter deck.
- In reverse mowing mode /I/ (see Operation, ignition lock): Exercise extreme caution when reverse mowing and do not activate unless absolutely necessary.
- Do not change direction when the appliance is coasting or driving.

- Start the engine as specified.
- Raise the cutters to the top.
- Set the cutting mechanism to the cutting height.
- Set the throttle lever into the middle position.
- Switch on PTO.
- Set the throttle lever into position .
- Lower the cutters.
- Release the parking brake.
- Press the drive pedal.

The best way to mow

Figure 21

Note

You can keep your lawn healthy by mowing off no more than $^1/_3$ of the stem length at a time. The cutting height should be increased above the normal level when mowing uneven surfaces.

- Set the cutting mechanism to the cutting height.
- Set the supporting wheels according to the cutting height.

Note

Cut the first two rounds so the cut grass is thrown out sideways into the middle.

- Never allow the grass to grow too long.
- Never cut the grass too low.
- Drive in a straight line.

Note

If the engine should cut out while mowing on a slope, secure the tractor against rolling by engaging the parking brake.

Mulching with accessory (optional)

The grass is chopped up fine (approx. 1 cm) during mowing and is left on the lawn. The lawn therefore retains a lot of nutrients. Please note the following:

- Do not mow wet grass.
- Never mow more than max. 2 cm of the total grass length.
- Drive slowly.
- Use the max engine speed.
- Clean the mower cover regularly.

Transporting the appliance

If changing location, drive the lawn tractor short distances only. Otherwise transport it by vehicle.

Note: The mower is not approved for public thoroughfares in accordance with StVO.

Short distances

Danger

Solid objects may be hit/propelled by the rotating cutting mechanism causing damage.

- Always switch off the cutting mechanism before moving the mower.

Long distances

Caution

Transport damages

The mode of transport used (e.g. transport vehicle, loading ramp) must be used in accordance with guidelines (refer to the respective operating instructions). When transporting, secure the mower against slipping.

Spilt fuel pollutes the environment

The appliance must not be tilted when it is transported.

- Have the transporting vehicle ready.
- Lay the loading ramp to the transporting vehicle.
- With the unit in free-wheel, push it up onto the transporting vehicle (disengage the transmission in the case of units with hydrostatic drive).
- Engage the parking brake.
- Secure the machine to prevent it from moving.

Cleaning / Servicing

⚠ ***Danger***
Injury hazard if engine is started inadvertently
Protect yourself against injury. Before all work on this unit
- *Switch off the engine.*
- *Take out the ignition key.*
- *Actuate the parking brake.*
- *wait until all moving parts have come to rest and the engine has fully cooled,*
- *remove the spark plug connector on the engine in order to prevent the engine from accidentally being started.*

Cleaning

Clean the machine

⚠ ***Caution***
Do not use high-pressure media for cleaning.
If the unit is not cleaned, material damage and function impairments will occur.
- If possible, clean the unit directly after work.
- Park the unit on a solid, even surface.
- Engage the parking brake.

Cleaning the cutting mechanism

⚠ ***Danger***
Injury hazard due to sharp cutting blade
Wear protective gloves.
If the unit has more than one cutting mechanism, moving one cutting mechanism may cause the other cutting mechanisms to move as well. Take special care when cleaning cutting mechanisms.

⚠ ***Caution***
Damage to engine
The mower must not be tilted to an angle greater than 30°. Fuel may run into the combustion chamber causing engine damage.
- Raise the cutting mechanism fully.
- Clean the cutting area using a scrubbing brush, a hand brush or a cloth.

Cutters with cleaning nozzle (optional)

Figure 24

Place the appliance on an even surface free of debris, stones, etc., and engage the locking brake.
1. Use a commercially available quick-release coupling to attach a water hose.
2. Start the engine.
3. Lower the cutters, and switch ON for a few minutes.
4. Switch OFF the cutters and engine.
5. Detach the water hose.

Repeat steps 1 to 5 for the second cleaning nozzle (if provided).

At the end of cleaning (steps 1 to 5):
- raise the cutters to the top,
- start the engine, and switch ON the cutters for a few minutes to dry them.

Servicing

Observe the servicing instructions in the engine manual. At the end of the grass-cutting season, have the lawn scarifier checked and serviced in a specialist workshop.

⚠ ***Caution***
Environmental hazard caused by engine oil
After every oil change, bring the old oil to an appropriate collection point or a waste disposal company.

Environmental hazard caused by batteries
Used batteries do not belong in domestic waste. Bring used batteries instead to your dealer or to a waste disposal company. emove the battery before scrapping the unit.

⚠ ***Caution***
Only a specialised workshop should perform work on the cutting mechanism, e.g. sharpening or replacing cutters.

ℹ **Note**
The following maintenance schedule contains other maintenance work.

Access to the engine compartment

Figure 19

⚠ ***Danger***
The engine and the side covering remain hot for a time after the engine has been switched off. Working on hot parts can lead to severe burns. Before you start working in this area, allow all parts to cool first.
- Park the tractor on an even, solid surface.
- Engage the parking brake.
- Conduct all work with the engine switched off.

Opening the bonnet

- Lift and open the bonnet at the two recesses (1).

Removing the side covers

- Open the snap buckles (2) and turn them to the side cover slots.
- Pull out and back the rear of the side cover.

Fuse box

The fuse box is installed beneath the bonnet behind the dashboard. Replace fuses only with those of identical rating.

Maintenance table

Maintenance work	Before every use	10 h	100 h	150 h	200 h	250 h	300 h
Lubricate ball bearings on front wheels		●					
Lubricate left / right steering head		●					
Lubricate front axle		●					
Check engine oil level	●						
Change engine oil and filter [1][2])	see engine manual for subsequent intervals						
Check gear oil	●						
Change the gear-oil filter [1])			●	●	●	●	●
Change gear oil [1])				●		●	
Check air filter and housing	●						
Clean / change air filter [1])	see handbook for engine						
Clean oil cooler (if fitted) [1])			●		●		●

[1]) This maintenance work must be performed at a specialised workshop.
[2]) Change the oil and filter after the first five operating hours (use the [optional] quick facility [Fig 22] on the oil drain).

Have your appliance with attachments checked and serviced once every season at a specialised workshop.
Observe the servicing instructions in the engine manual.

Other maintenance work

Every 2 months

- Inflate the tyres in accordance with the specifications on their walls.

For battery type 2 only

- Fill the battery cells with distilled water to 1 cm below the filler hole.

Lubrication chart

Figure 18

1. 251H EP grease or a universal lithium grease no. 2.
2. Engine oil: see engine handbook
   Gear oil: special drive system oil
3. High-quality lubricating oil.

A. Pedal control bearing
B. Front axle
C. Left / right front wheels
D. Left / right tie rod end

Use a grease gun at the grease nipples. High-quality lubricating oil should be applied regularly to other moving parts without grease nipples.

Shutting down the machine

⚠ ***Caution***

Damage to mower materials

Store the unit with the engine cooled in a clean, dry enclosure only. Always protect the mower against rust if it is to be left for comparatively long periods, e.g. over the winter.

At the end of the season or if the appliance will not be used for longer than a month:

- clean the mower and the grass catcher,
- Wipe down all metal parts with an oily cloth or apply oil spray to protect against rust.
- Charge the battery with a battery charger.
- Before winterising the appliance, remove the battery. The battery must then be charged and kept in a dry, cool place (protected against frost), and recharged every 4 to 6 weeks and before the next use.
- Drain out the fuel (in an open space) and prepare the engine for storage as described in the handbook for the engine.
- Inflate the tyres in accordance with the specifications on their walls.
- Store the unit in a clean, dry enclosure.

Warranty

In each country, the warranty conditions issued by our company and/or importer apply.

Defects in the equipment will be rectified by us free of charge during the warranty period where these are the results of flaws in the material or in the manufacture of the equipment. In case of warranty claims, please contact your dealer or nearest branch office.

Engine

The manufacturer of the engine is liable for all engine-related problems with respect to output power, power measurement, specifications, warrantie, and service. Informations can be found in the owner / operator handbook provided separately by the engine manufacturer.

Troubleshooting

⚠ ***Danger***
Injury hazard if engine is started inadvertently
Protect yourself against injury. Before all work on this unit

- *Switch off the engine.*
- *Take out the ignition key.*
- *Actuate the parking brake.*
- *Wait until all moving parts have come to rest and the engine has fully cooled.*
- *Disconnect the lead to the spark plugs on the engine so that the engine cannot start inadvertently.*

Problems that occur while you are using the mower are often caused by something simple which you will probably be able to rectify yourself. In cases of doubt your specialised garage will be pleased to assist you further.

Fault	Possible cause	Action	To be done by
Difficulty starting the engine	Tank empty.	Fill the fuel tank (see handbook for engine).	Operator
	Fuel line or carburettor blocked.	Clean the fuel line and the carburettor (see handbook for engine).	Service
	Fuel filter blocked.	Clean or replace the fuel filter (see handbook for engine).	Service/ Operator
	Choke and throttle at wrong position.	Actuate the choke. Move throttle to 🐇 .	Operator
	Spark plug dirty.	Clean or replace the spark plug (see handbook for engine).	Service/ Operator
	Battery does not give current.	Check battery, recharge or replace.	Service
	Safety interlock system has actuated.	To start the engine, first sit down on the driver's seat. Press down fully the brake pedal or engage the locking brake. Switch off the engage switch (PTO).	Operator
The engine does not run smoothly or splutters	Engine not in tune.	Have the engine tuned.	Service
	The ignition spark does not occur.	Check the spark plug and the wiring (see handbook for engine).	Service
	Carburettor incorrectly set.	Reset the carburettor (see handbook for engine).	Service
	Air filter is very dirty.	Clean or replace the air filter (see handbook for engine).	Service
	Supply of air to the engine is insufficient.	Remove grass and chaff from the radiator grill and the side covering (see "Cleaning").	Operator
Brake does not grip	The brake setting is no longer correct or the brake pads are worn out.	Switch off the engine and have the brake settings checked.	Service
Strong vibration	Damaged blade shaft or defective blades.	Switch OFF appliance immediately. Have defective parts replaced in a specialist workshop.	Service
Engine is running, cutter deck is not mowing	V-belt torn.	Have the V-belt replaced in a repair shop.	Service